CHAPTER OVERVIEW

Operating Instructions .....

Spare Parts Lists .....

Options (if equipped) .....

Attachment .....

A

B

C

D

Manufacturer in terms of 97/23/EC

The full name and address of the manufacturer is:

Lenhardt & Wagner GmbH

An der Tuchbleiche 39
68623 Hüttenfeld / Germany

Phone: +49 (0) 62 56 - 85 88 0 - 0
Fax: +49 (0) 62 56 - 85 88 0 - 14

E-Mail: service@lw-compressors.com
Internet: www.lw-compressors.com

CE

Compressor information

Type designation

Serial number

Date of construction

Purchase information

Purchase date

First commissioned on

Warranty period

Dealer's stamp

Warranty

L&W will uphold warranty claims made during a period of 12 months from the invoice date.
If the compressor was purchased from an official L&W dealer, the date on the dealer's invoice is valid. Warranty claims can only be made on presentation of the original invoice.
Should verifiably defective parts have been delivered, we will decide to either replace the parts or repair them. The resulting transport and assembly costs will be invoiced.
No reduction of the purchase price or changes to the contract can be made. The parts for which a claim is being made should be kept safe by the purchaser and, when requested, sent to us at their cost. Replaced parts become the property of L&W. If maintenance work is carried out without our knowledge or permission by the purchaser or a third party, we are absolved from any liability for warranty claims. As a matter of principle, warranty claims can only be made by the initial purchaser.

A

Operating Instructions

Breathing Air Compressor

LW 100 series

Version: 29.03.2016

General Information and Technical Data

General Information / Description of Warning Symbols 4
Drive motors 5
Scope of Delivery LW 100 E (ECO) / LW 100 E1 (ECO) 6
Scope of Delivery LW 100 B ECO / LW 100 B 7
Technical Data 8
Unit Assembly LW 100 E / E1 9
Unit Assembly LW 100 B 10
Flow chart 11

Safety Precautions

Intended Use / Operators 13
Safety instructions on the unit 14
General Safety Precautions 15
Unit customised safety notices 16
Maintenance instructions 17
Transportation instructions / Safety regulations 18

Installation

Installation in closed rooms - LW 100 E / E1 20
Installation LW 100 B 21
Dimensions 22
Minimum distances 23
Ventilation LW 100 E / E1 24
Electrical Installation LW 100 E / E1 ..... 25 - 26

Operation

Important operation instructions 28
First commissioning LW 100 E / E1 ..... 29 - 30
First commissioning LW 100 B 31
Daily commissioning 32
Filling procedure 33
Switch off the compressor 34

Remedying faults

..... 35 - 39

Maintenance and Service

Service, Repair and Maintenance 41
Maintenance Lists / Maintenance Intervals ..... 42 - 44
Service Kits 45
Check V-belt tension / Tension V-belt / Settings 46
Compressor lubrication / Check oil level 47
Oil change 48
Manual condensation dump system 49
Oil / water separators 2nd stage - maintenance 50
Filter housing / Filter cartridge 51
Filter cartridge change 52
Filter housing - maintenance 53
Inlet Filter 54
Check or change filter inlet 55
Valve heads and valves / Pistons and Cylinders / Cooling 56
Replace inlet and outlet valve 1st stage ..... 57 - 58
Replace inlet and outlet valves 2nd and 3rd stage 59
Safety valves 60
Pressure maintaining / non return valve 61
Adjust pressure maintaining valve 62
O-rings - filling valve and filling hose 63
Motor change 64
Pressure gas vessel test 65
Maintenance records ..... 66 - 71

Storage

Conservation / storage of the compressor 72
De-conservation, commissioning 73
Transportation instructions / Disposal / Electric and electronic components 74

General Information

We strongly recommend reading this manual thoroughly prior to operation and follow all the safety precautions precisely. Damage resulting from any deviation from these instructions is excluded from warranty and liability for this product. Carry out other commissioning steps only if you have fully understood the following contents.

Before commissioning and using the unit, carry out all the essential preliminary work and measures concerning legal regulations and safety. These are described on the following pages of this operation manual.

Description of marks and warning signs

The following warning signs are used in this document to identify the corresponding warning notes which require particular attention by the user. The warning signs are defined as follows:

Caution
Indicates an imminently hazardous situation which, if not avoided, could result in serious injury, physical injury or death.

Warning
Indicates a potentially hazardous situation which, if not avoided, could result in physical injury or damage to the product or environment.

Note
Indicates additional information on how to use the unit.

Drive motors

LW 100 B ECO / LW 100 B

High performance Briggs & Stratton 4 gear motor (4.5 kW) with integrated fuel tank.

Pull start, auto cut off at low oil level

LW 100 E ECO / LW 100 E

2.2 kW E-Motor / 400V (230V/440V as an option) / 3 phase / 50 Hz (60 Hz as an option).

Start/Stop switch, fully wired with cable and 16A CEE plug.

LW 100 E1 ECO / LW 100 E1

2.2 kW E-Motor / 230 V AC / 50 Hz (as an option 60 Hz).

Start/Stop switch, fully wired with cable and two-pin earthed plug 230V.

Special Honda - Gasoline Motor

LW 100 B ECO / LW 100 B

High performance Honda 4 gear motor (3.6 kW) with integrated fuel tank.

Pull start, auto cut off at low oil level

Scope of Delivery LW 100 E (ECO) / LW 100 E1 (ECO)

Compressors are provided in different equipped versions.

Versions

Filling pressure versions:

- PN 225 bar
- PN 330 bar
- PN 225 / 330 bar

Differences ECO to the Standard-Model

- Frame in a aluminium
- No carrying handles
- Unpainted compressor block
- No filling valve holder

Specifications

- Power cable with plug
- Start/Stop Switch
- Stainless steel frame / aluminium frame (ECO)
- Manual condensate drain
- Pressure maintaining and non return valve
- 1 x Filling hose c/w f lling valve and pressure gauge
- Intermediate coolers
- Oil- / Water separators after 2nd and 3rd stage
- Safety valves after for each stage
- All pistons with piston rings
- Filling pressure to your choice (200 or 300 bar)
- Connections to your choice (DIN 200 bar or 300 bar, CGA 200 bar or 300 bar and INT)

Options

- Carrying handles (ECO only)
- Filling valve holder (ECO only)
- Additional filling hose c/w filling valve
- Automatic condensate drain
- Automatic stop at final pressure c/w hour counter
- Switch over device for 200 or 300 bar
- Motor protection switch
- Conversion set: Petrol-/electro version
- 60 Hz Version
- 230V / 440V Version (LW 100 E / E ECO only)

Scope of Delivery LW 100 B ECO / LW 100 B

Compressors are provided in different equipped versions.

Versions

Filling pressure versions:

- PN 225 bar
- PN 330 bar
- PN 225 / 330 bar

Differences ECO to the Standard-Model

- Frame in a aluminium
- No carrying handles
- Unpainted compressor block
- No filling valve holder

Specifications

- Stainless steel frame / aluminium frame (ECO)
- Manual condensate drain
- Pressure maintaining and non return valve
- 1 x Filling hose c/w f lling valve and pressure gauge
- Intermediate coolers
- Oil- / Water separators after 2nd and 3rd stage
- Safety valves after for each stage
- All pistons with piston rings
- Filling pressure to your choice (200 or 300 bar)
- Connections to your choice (DIN 200 bar or 300 bar, CGA 200 bar or 300 bar and INT)

Options

- Carrying handles (ECO ony)
- Filling valve holder (ECO only)
- Additional filling hose c/w filling valve
- Automatic stop at final pressure c/w hour counter
- Switch over device for 200 or 300 bar
- Conversion set: Petrol-/electro version

Technical Data

Technical Data	LW 100 E / (ECO)	LW 100 E1 / (ECO)	LW 100 B / (ECO)
Capacity [l/min]:	100	100	100
Max. Operating Pressure [bar]:	350	350	350
RPM [min^{-1}]:	2300	2300	2300
Number of Pressure Stages:	3	3	3
Cylinder Bore 1st Stage [mm]:	Ø 60	Ø 60	Ø 60
Cylinder Bore 2nd Stage [mm]:	Ø 30	Ø 30	Ø 30
Cylinder Bore 3rd Stage [mm]:	Ø 12	Ø 12	Ø 12
Medium:	Compressed Air / Breathing Air		
Intake Pressure:	atmospheric		
Oil Capacity [l]:	0,5	0,5	0,5
Intake Temperature [°C]:	0 < +45	0 < +45	0 < +45
Ambient Temperature [°C]:	+5 < +45	+5 < +45	+5 < +45
Cooling Air Volume [m^3/h]:	> 660	> 660	> 1350
Voltage:	400V / 3-Phase / 50 Hz	230V / 1-Phase / 50Hz	-
Protection Class Drive Motor:	IP 55	IP 55	-
Drive Power [kW]:	2.2	2.2	4.5
RPM Motor [min^{-1}]:	2890	2890	2890
Start:	Start / Stop switch		Hand start
Noise level [dB(A)]:	82	82	93
Dimensions L x W x H [mm]:	650 x 390 x 400	650 x 390 x 400	780 x 380 x 400
Weight [kg]:	approx. 43 / (39)	approx. 43 / (39)	approx. 46 / (42)
Content Volume Filter housing [l]:	0.37	0.37	0.37

Unit Assembly LW 100 E / E1

No.	Designation
1	Pressure gauge
2	Filling hose with filling valve
3	Carrying handles (ECO Optional)
4	E-Motor / 400V / 3 Phase / 50 Hz or E-Motor / 230V / single phase / 50Hz

A

Unit Assembly LW 100 B

No.	Designation
1	Pressure gauge
2	Intake telescopic pipe
3	Filling hose with filling valve
4	Carrying handles (ECO Optional)
5	4 stroke gasoline engine, hand start

A

Flow chart

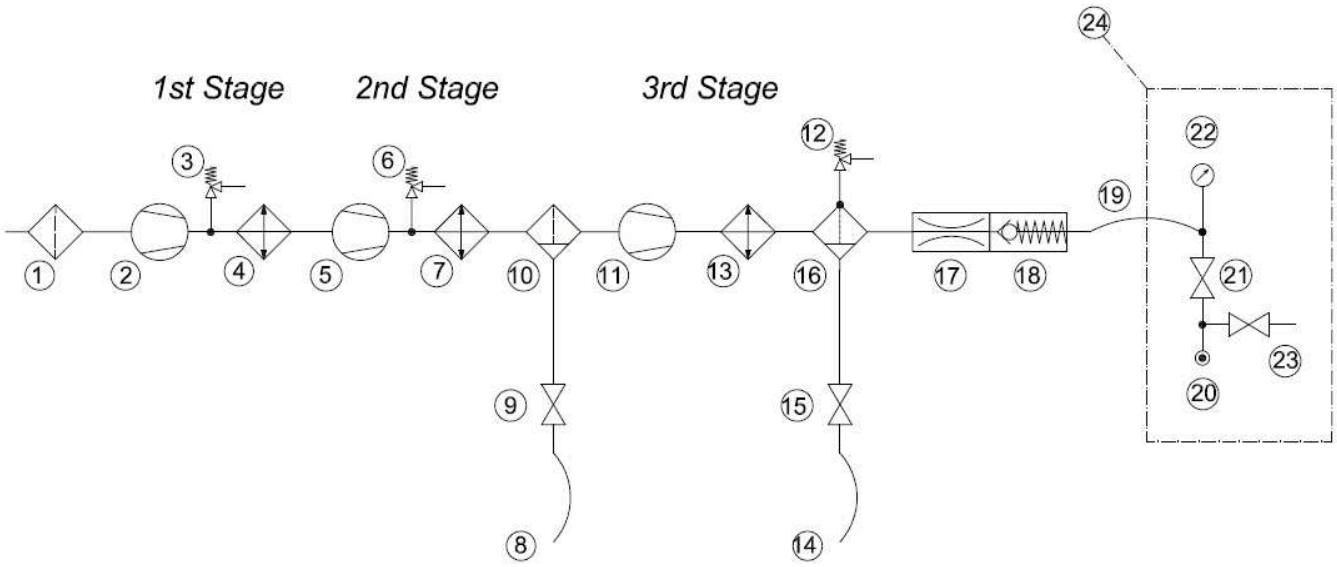

1. Air Intake Filter
2. 1st Pressure Stage
3. Safety Valve 1st Stage
4. Cooling Pipe 1st Stage
5. 2nd Pressure Stage
6. Safety Valve 2nd Stage
7. Cooling Pipe 2nd Stage
8. Condensate Release Hose
9. Condensate Release Valve
10. Oil-/Water Separator
11. 3rd Pressure Stage
12. Endpressure-Safety Valve
13. Cooling Pipe Final Stage
14. Condensate Release Hose
15. Condensate Release Valve
16. Oil-/Water Separator
17. Pressure Maintaining Valve
18. Non-Return Valve
19. Filling Hose
20. Filling Connector
21. Filling Valve
22. Pressure Gauge (Filling Pressure)
23. Vent Valve
24. Unit Filling Valve "Cross Design"

SAFETY PRECAUTIONS

Intended Use

Only use the unit in perfect condition for its intended purpose, safety and intended use and observe the operating instructions! In particular disorders that may affect safety have to be eliminated immediately!

Use the unit exclusively for the determined medium (see "Technical Data"). Any other use that is not specified is not authorized. The manufacturer/supplier shall not be liable for any damages resulting from such use. Such risk lies entirely with the user. Authorization for use is also under the condition that the instruction manual is complied with and inspection and maintenance requirements are enforced.

No change and modification to the unit can be made without the written agreement of the manufacturer. The manufacturer is not liable for damage to persons or property resulting from unauthorised modifications.

Operators

Target groups in these instructions;

Operators

Operators are persons who are authorized and briefed for the use of the compressor.

Qualified personnel

Qualified personnel are persons who are entitled to repair, service, modify and maintain the system.

Warning
Only trained personnel are permitted to work on the unit!

Warning
Work on the electrical equipment on / with the machine / unit may only be carried out by qualified electricians.

Safety instructions on the unit

Importance of notes and warning signs that are affixed to the compressor according to the application or its equipment.

Warning

High voltage!

Note

Ensure correct direction of rotation!

General Safety Precautions

- Read the Operating Instructions of this product carefully prior to use.
- Read the Operating Instructions of the petrol engine carefully prior to use. (LW 100 B Versions)
- Strictly follow the instructions. The user must fully understand and strictly observe the instructions. Use the product only for the purposes specified in the intended use section of this document.
- Do not dispose the operating instructions. Ensure that they are retained and appropriately used by the product user.
- Only trained and competent personnel are permitted to use this product.
- Comply with all local and national rules and regulations associated with this product.
- Only trained and competent personnel are permitted to inspect, repair and service the product.
- Only authentic L&W parts and accessories may be used for maintenance work. Otherwise, the proper functioning of the product may be impaired.
- Do not use faulty or incomplete products. Do not modify the product.
- Inform L&W in the event of any product or component fault or failure.
- The quality of the air supply must meet EN 12021 specifications for breathing air.
- Do not use the product in areas prone to explosion or in the presence of flammable gases. The product is not designed for these applications. An explosion might be the result if certain conditions apply.

Unit customised safety notices

Organisational measures

- In addition to the instruction manual, observe and comply with universally valid legal and other obligatory regulations regarding accident prevention and environment protection.
- In addition to the instruction manual, provide supplementary instructions for supervision and monitoring duties taking into consideration exceptional factors e.g. with regard to organisation of work, production, personnel employed.
- Supervise personnel's work in accordance with the instruction manual, taking into account safety and danger factors.
- Observe all safety and danger notices on the compressor and check readability and completeness.

Safety instructions operation

- Take measures to ensure that the machine is only taken into operation under safe and functional conditions. Only operate the compressor if all protective and safety equipment, e.g. detachable protective equipment, are provided and in good working order.
- Check the compressor at least once per day for obvious damage and defects. Inform the responsible department / person immediately if anything is not as is should be (including operation performance). Shut down the machine immediately if necessary and lock it.
- In case of malfunction, stop the compressor immediately and lock it. Repair malfunctions immediately.
- If there is a failure in the electric energy supply, shut the machine / unit down immediately.
- Ensure safe and environmentally friendly disposal of consumables and old parts.
- The stipulated hearing protectors must be worn.
- Soundproofing equipment on the compressor has to be activated in safety function during operation.
- When handling with fats, oils and other chemical agents, observe the note for the product-related safety.
- Check all additional safety notices for the petrol engine in the specific handbook (LW 100 B Versions)

Maintenance instructions

- Hoses have to be checked by the operator (pressure and visual inspection) at reasonable intervals, even if no safety-related defects have been detected.
- Immediately repair any damage. Escaping compressed air can cause injury.
- Depressurise system and pressure lines before beginning repair work.
- Pressurised air lines must be laid and mounted by qualified personnel. Connections must not be mixed up. Fittings, length and quality of the piping must correspond to requirements.
- Adjustment, maintenance and inspection activities and keep appointments, including information on replacement parts / equipment, prescribed in the operating instructions have to be respected.
- If the machine / equipment is completely off during maintenance and repair work, it must be protected against unexpected restart. Turn off main control device and remove the key and/or display a warning sign on the main switch.
- The machine and especially the connections and fittings should be cleaned from oil, fuel and maintenance products at the beginning of the maintenance / repair. Do not use aggressive cleaning agents. Use fibre-free cleaning cloths.
- Switch off compressor and clean with a slightly damp cloth. Remove dirt from cooling pipes by using a brush.
- After cleaning, examine all pipes for leaks, loose connections, chafing and damage. Immediately eliminate any faults.
- Always retighten any screw connections loosened for maintenance or repair work.
- If it is necessary to remove safety devices for maintenance and repair work, these must be replaced and checked immediately after completion of the maintenance or repair work.
- The electrical equipment of the compressor must be regularly checked. Defects, such as loose screw connections or burnt wires, must be immediately rectified by electrically skilled personnel.
- Only personnel with particular knowledge and experience with pneumatics may carry out work on pneumatic equipment.
- Only personnel with particular knowledge and experience in gas equipment may carry out work on gas equipment.
- Any work on the petrol engine should be done in accordance with ist specific handbook. (LW 100 B Versions)

Transportation instructions

- Parts which need to be dismantled for transport purposes must be carefully replaced and secured before taking into operation.
- The transport may only be carried out by trained personnel.
- For transportation, only use lifting devices and equipment with sufficient lifting power.
- Do not stand or work under suspended loads.
- Even minor relocation please disconnect the machine / system from any external energy supply.
- Before recommissioning, reconnect the machine to the mains according to regulations.
- When recommissioning, proceed according to the operating instructions..

Safety regulations

- Inspections according to legal and local obligatory regulations regarding accident prevention are carried out by the manufacturer or by authorised expert personnel. No guarantees whatsoever are valid for damage caused or favoured by the non-consideration of these directions for use.

INSTALLATION

Installation in closed rooms - LW 100 E / E1

Danger
No operation in explosion-hazard areas.
The unit is not approved for operation in areas prone to explosion.

For installation in closed rooms, observe the following:

- Install the unit horizontally and level. The floor must be vibration-free and capable of taking the load of the system weight.
- The compressor room must be clean, dry, dust free and as cool as possible. Avoid direct exposure to sunlight. If possible, install unit in such a manner that the compressor fan can intake fresh air from outside. Ensure adequate ventilation and exhaust air opening.
- When locating the compressor in rooms of less than 30 m^3 space where natural ventilation is not ensured or other systems having high radiation are operating in the same room, measures must be taken to provide artificial ventilation.
- Intake air must be free from noxious gas e.g. smoke, solvent vapours, exhaust fumes etc.
- Observe the specified operating temperature (see "Technical Data")!

Installation LW 100 B

Danger
Compressors with petrol or diesel motors must only be located outdoors, never indoors, not even in partially closed rooms however large they may be.

For outside installation observe the following:

- Install the unit horizontally and level. The floor must be vibration-free and capable of taking the load of the system weight.
- On units employing petrol or diesel motors, it is most important that only clean air is used. Position compressor in direction of wind so that exhaust fumes are blown away from the unit.
- Intake air must be free from noxious gas e.g. smoke, solvent vapours, exhaust fumes etc.
- Observe the specified operating temperature (see "Technical Data")!

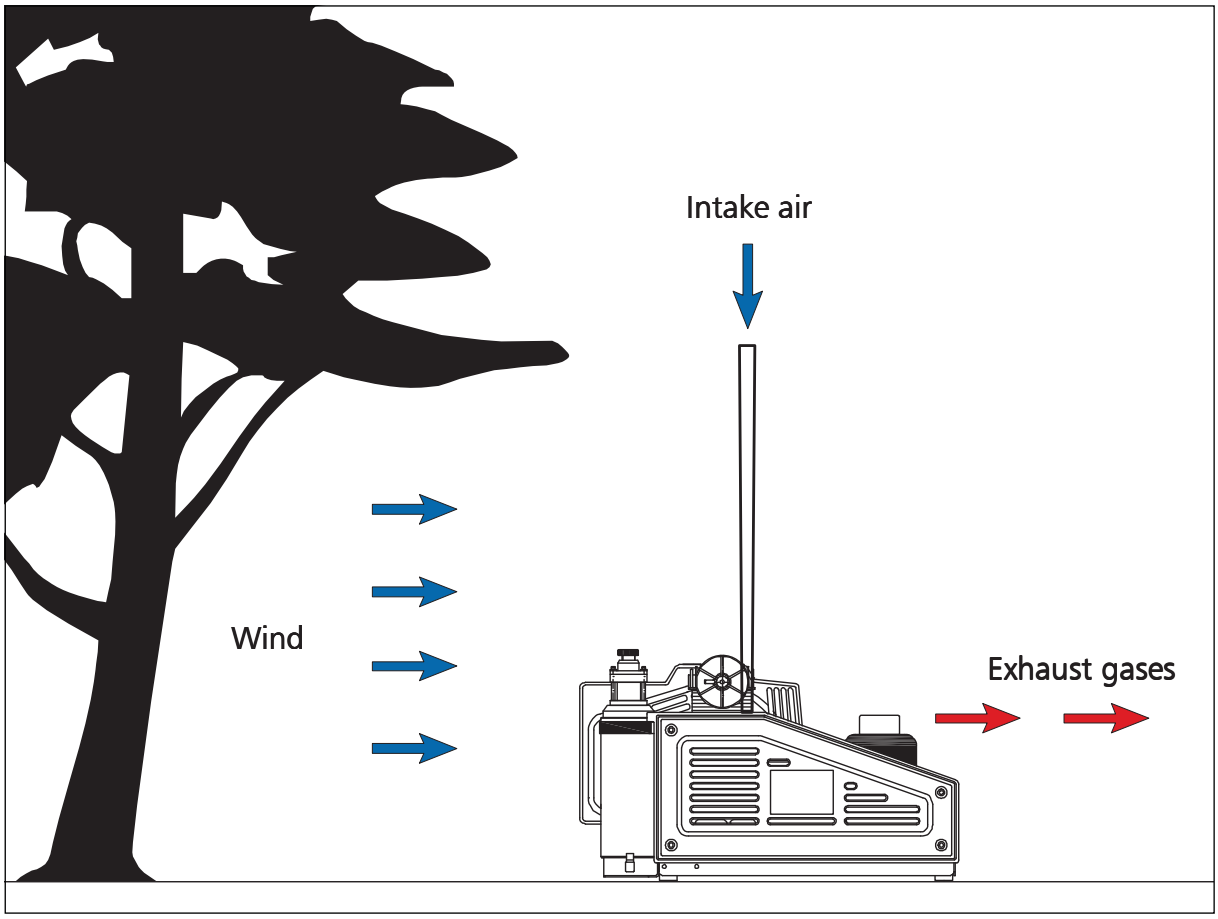

Dimensions LW 100 E / E1

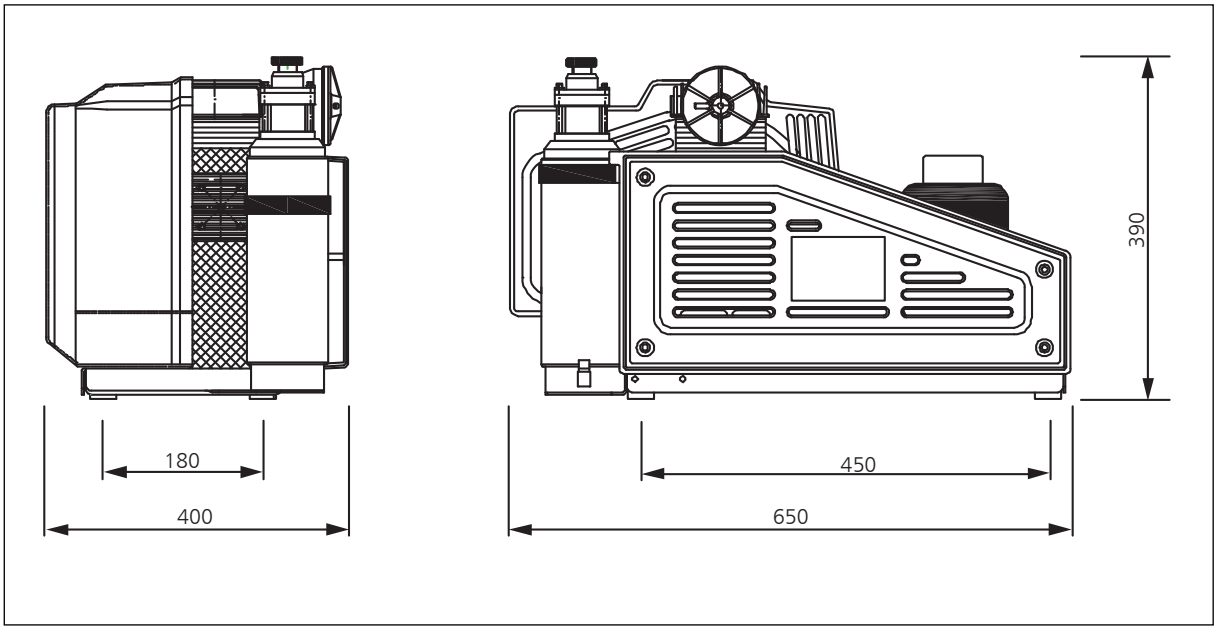

Fig. Dimensions

Dimensions LW 100 B

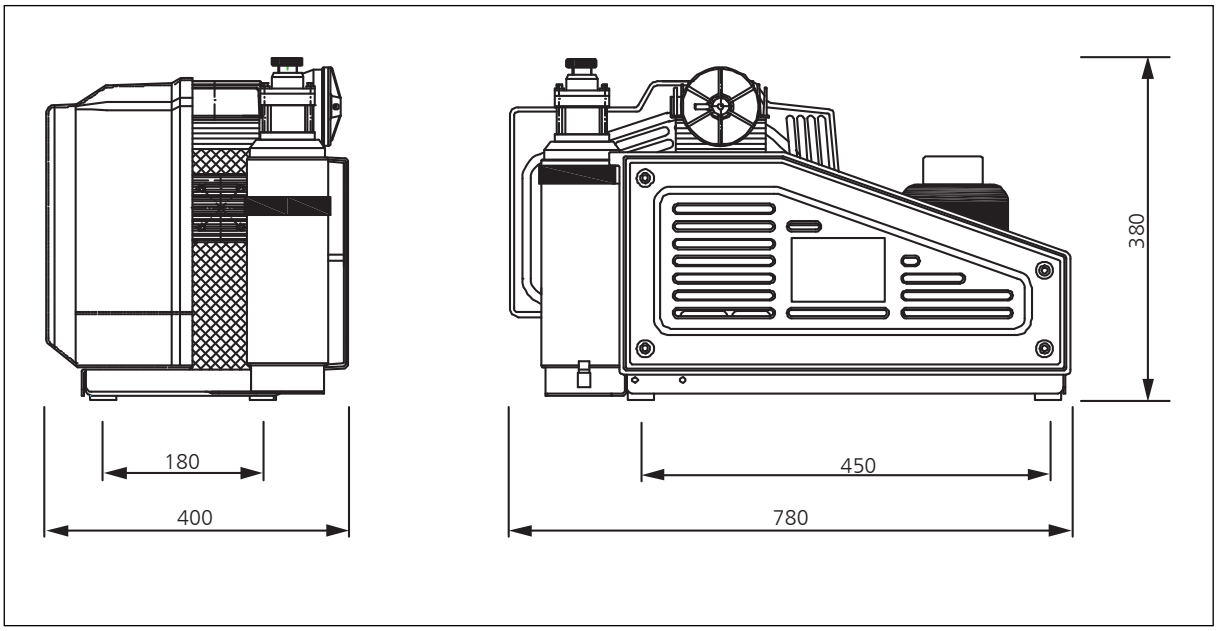

Fig. Dimensions

Minimum distances

Note
Minimum distances must be adhered!

- Make sure that the compressor always has a sufficient amount of fresh air available.
- To prevent serious damage, ensure that the cooling air flow can flow freely.
- The following minimum distances must be adhered:
  Front side min. 300 mm, rear side min. 300 mm. Avoid anything in this area which can restrict the cooling air flow.
- No minimum distances are required at the side panels.

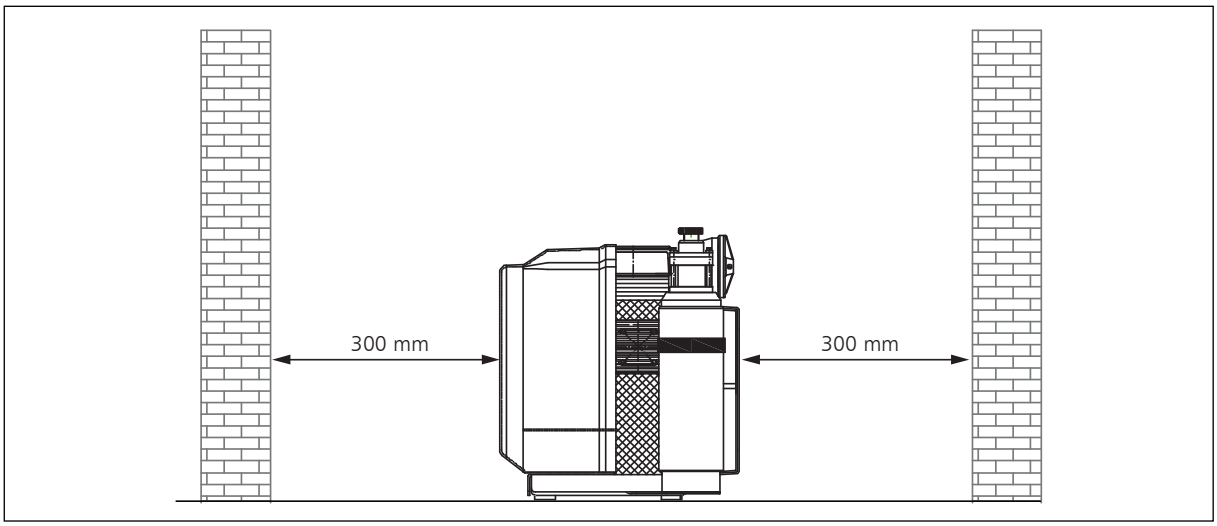

Fig. Minimum distances LW 100 E / E1

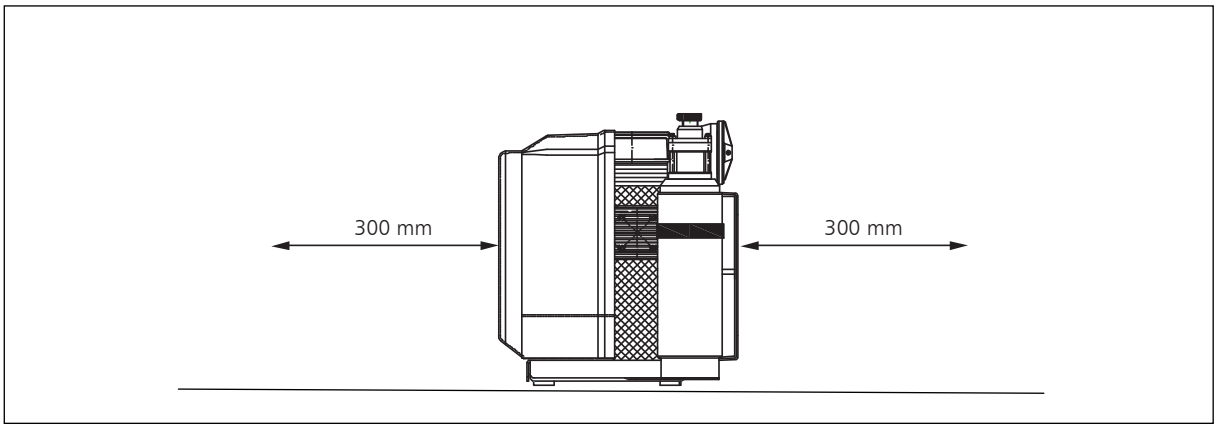

Fig. Minimum distances LW 100 B

Ventilation LW 100 E / E1

- Make sure that the compressor always has a sufficient amount of fresh air available for cooling.
- To prevent serious damage, ensure that the cooling air flow can flow freely.
- The necessary cooling air flow can be calculated by using the following formula:
  300 x drive power [kW] = required cooling air flow [m³/h]
  Example 11kW motor: 300 x 11kW = 3300 m³/h = required cooling air flow.
- The fan capacity for fresh air and warm air must meet at least the required cooling air flow.
  The fans must have the same capacity.

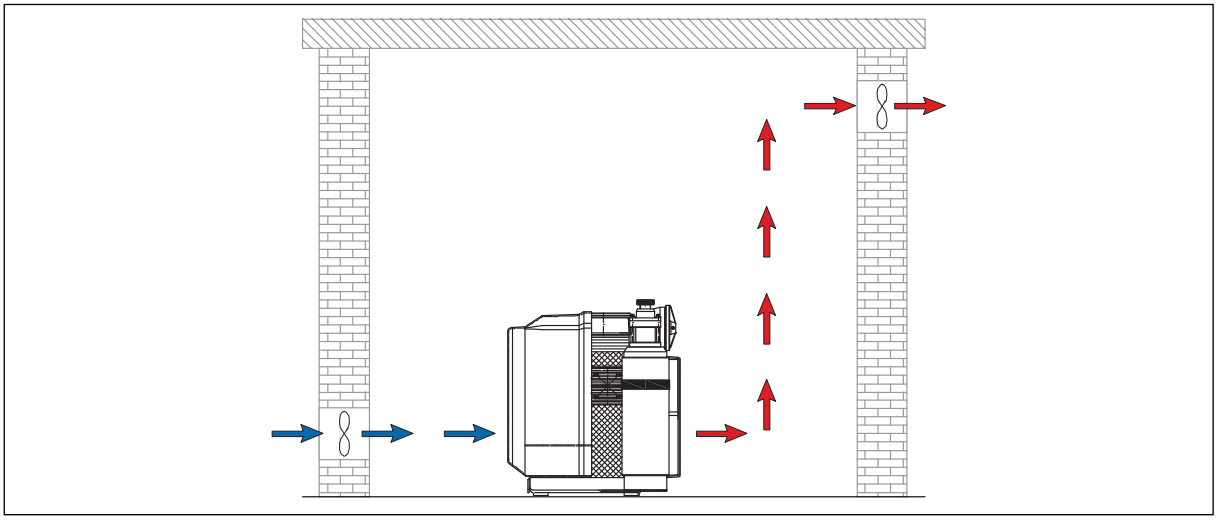

Fig. Ventilation through facade

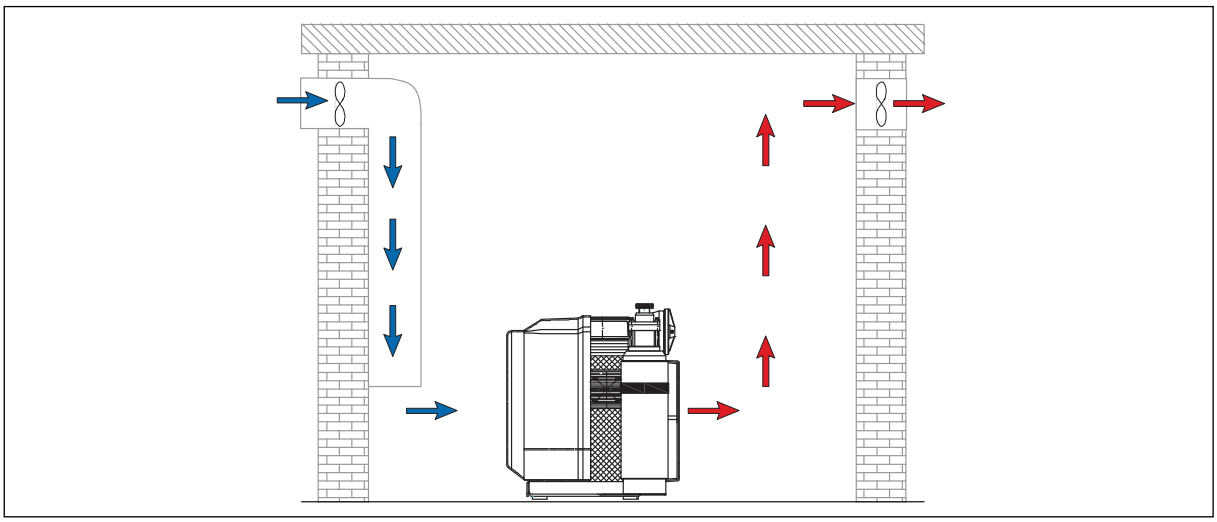

Fig. Ventilation via ventilation stack

Electrical Installation LW 100 E / E1

Warning
Work on the electrical equipment on / with the machine / unit may only be carried out by qualified electricians.

For installation of electrical equipment, observe the following:

- If control devices are delivered by the factory, refer to the appropriate wiring diagram.
- Ensure correct installation of protective conductors.
- Check conformity of motor and control device tension and frequency with those of the electric network (see name plate on the compressor).
- The fusing should be done in accordance with the valid regulations of the responsible electricity supply company.
- When connecting the unit to the electrical supply, check the compressor direction of rotation (see chapter "Operation -> First commisioning - LW 100 E/E1).
- Fuse the motor correctly (see table; use slow-blow fuses).

Electrical Installation LW 100 E / E1

The compressor comes fully wired with cable and plug. An installation is not necessary.

Recommended fuses for 360 - 500 V operating voltage

Nominal motor power		Fusing start A		Connection in mm²	
[kw]	[A]	Direct	Star/Delta	Contactor supply	S/D* to Motor
2.2	5	10	-	1.5	1.5
4	8.5	20	-	2.5	1.5

Recommended fuses for 220 - 240 V operating voltage

Nominal motor power		Fusing start A		Connection in mm²	
[kw]	[A]	Direct	Star/Delta	Contactor supply	S/D* to Motor
2.2	8.7	20	-	1.5	1.5
4	14.8	25	-	2.5	1.5

* S/D - Star / Delta.

Terminal Box Wiring

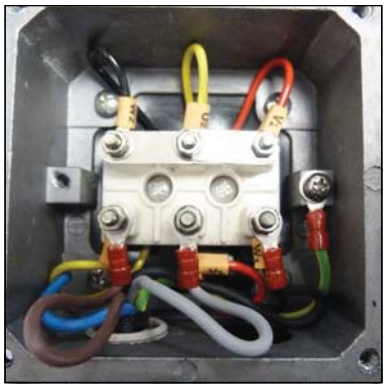

Fig. 1 - Connections LW 100 E

Fig. 2 - Connections LW 100 E1

OPERATION

Important operation instructions

Danger
On petrol or diesel engines, operation unit must only be located outdoors, never indoors, not even in partially closed rooms however large they may be.

Note
Ensure that all persons handling the compressor are familiar with function and operation of the unit.

Wear hearing protection
When working on a running machine, always wear hearing protection.

Prior to first commissioning, observe the following:

- Ensure that cooling air can flow freely.
- Check compressor oil level with the oil dipstick (see "Service and Maintenance").
- Check all connections and retighten if necessary.
- Check if the filter cartridge is in place (see "Service and Maintenance").
- Check the V-belt tension (see "Service and Maintenance").
- Check if all filling valves are closed. Open one filling valve and hold tight manually!

Start the compressor

1. Start the compressor by pushing the ON button.
2. Check turning direction - see the rotary direction arrow on the fan protection cover (see next pages). If the turning direction is wrong, immediately stop the compressor by pushing the OFF button and contact an authorised electrician.

Warning
Wrong impeller rotation direction!
Immediately after switching the compressor on, check the rotation direction. Depending on the place of installation, the phase sequence can influence the rotation direction.

3. Check oil pressure (if oil pressure gauge is installed).
4. Run the compressor for about 2 minutes.
5. Close the open filling valve carefully.
6. Run the compressor up to maximum pressure and check the function of the final pressure safety valve. If the compressor is equipped with an automatic stop system please check the automatic shut down at final pressure. If the final pressure switch does not shut off, switch off the compressor with the OFF button (see chapter "Remedying faults").
7. Check the compressor unit for leaks (see "Service and Maintenance").
8. Option: Automatic Condensate Drain
   Now check the condensate drain valves:
   - Fix the black condensate hoses
   - Drain test - press the test button
   - If correct, air escapes
9. Stop the compressor by pushing the OFF button.
10. Open all filling valves carefully to vent.

Check turning direction - LW 100 E

Warning
Wrong impeller rotation direction!
Immediately after switching the compressor on, check rotation direction. Depending on the place of installation, the phase sequence can influence the rotation direction.

Before starting the compressor for the first time, check rotation direction (see the rotary direction arrow on the housing of the electric motor).

If the direction of rotation is wrong, the guide pistons of the 2nd and 3rd stages can not be sufficiently lubricated, with the consequence that the pistons will be damaged. Furthermore, cooling air flow will not be sufficient.

Rotation direction arrow on the fan protection cover.

Rotation direction change - LW 100 E

Warning
Work on the electrical equipment on / with the machine / unit may only be carried out by qualified electricians.

In case of a wrong impeller rotation direction, an electrically skilled person can swap two phases.

Prior to first commissioning, observe the following:

- Ensure that cooling air can flow freely.
- Position compressor in direction of wind so that exhaust fumes are blown away from the unit.
- Take protection measures to avoid damages or injury by exhaust gases/exhaust pipe.
- Check fuel capacity.
- Check drive motor oil level.
- Check the oil level of the compressor.
- Check all connections and tighten if necessary.
- Check if a filter cartridge is in place. (see "Service and Maintenance")
- Check V-belt tension. (see "Service and Maintenance")
- Read carefully the handbook of the petrol engine.
- Ensure that all filling valves are closed. Open one filling valve and hold tight manually!

Start the compressor

1. Open fuel valve (Fig. 1)
2. Switch motor switch in position 1
3. Pull start (Fig. 2)
4. Close condensate valves
5. Run the compressor for about 2 minutes
6. Close the open filling valve carefully
7. Run the compressor up to maximum pressure and check the function of the final pressure safety valve. If the compressor is equipped with an automatic stop system please check the automatic shut down at final pressure. If the final pressure switch does not shut off, switch off the compressor with the OFF button (see chapter "Remedying faults").
8. Check the compressor unit for leaks (see "Service and Maintenance")
9. Option: Automatic Condensate Drain
   Now check the condensate drain valves:
   - Fix the black condensate hoses
   - Drain test - press the test button
   - If correct, air escapes
10. Stop the compressor by pushing the OFF button.
11. Open all filling valves carefully to vent.

Fig. 1 - Fuel valve

Fig. 2 - Speed control and pull start

Prior to daily operation observe the following:

LW 100 E / E1

- Ensure cooling air can flow freely.
- Check the compressor oil level by the oil dipstick.
- Check if filter cartridge is in place / observe filter cartridge life!
- Ensure toxic-free, pure intake air.

LW 100 B

- Ensure cooling air can flow freely.
- Position compressor in direction of wind so that exhaust fumes are blown away from the unit. (see Installation -> Installation LW 100 B)
- Take protection measures to avoid damages or injury by exhaust gases/exhaust pipe.
- Check the compressor oil level by the oil dipstick.
- Check if filter cartridge is in place / observe filter cartridge life!
- Check fuel capacity.
- Check drive motor oil level.
- Ensure toxic-free, pure intake air.

Filling procedure

Caution! Fill only cylinders which:
- are marked with the test mark and the test stamp of the expert.
- have been hydrostatic tested (check last test date).
- are rated for the final pressure.
- are free from humidity.

Note
The unit must be stopped manually when final pressure is reached. No serial auto shut down. The unit must also be started manually.

Caution
Vent condensate drain valves every 15-30 minutes manually.

1. Close all filling valves.
2. Connect the closed compressed air cylinders.
3. Open cylinder valves.
4. Start the compressor
5. When filling pressure gauge increases, open filling valves slowly.
6. Fill the compressed air cylinders to the desired pressure; close slowly the valves of the cylinders.
7. Switch off the compressor.
8. Close and vent all filling valves.
9. Disconnect all compressed air cylinders from filling valves.
10. Open condensate drain valves manually.

Switch off the compressor

Note
After switching off, open condensate drain valves manually to vent the unit.

The compressor unit is not equipped as standard with an auto shut down. The unit must always be stopped manually when final pressure is reached.

During filling process, the system can be shut down at any time by pushing the OFF - button (OFF) .

Switch off the compressor unit LW 100 E / E1

- Stop compressor by the toggle switch (OFF).

Switch off the compressor unit LW 100 B

- Stop compressor by the toggle switch (OFF).
- Close fuel shut-off valve.

REMEDYING FAULTS

Final pressure can not be reached

Cause of fault	Remedy
Connections leaky	Retighten or clean/replace if necessary
Final pressure safety valve leaky	Replace, turn out vent screw if necessary
Pipes / heat exchanger broken	Replace
Condensate drain valves leaky	Unscrew valves, check sealing surfaces, clean, replace if necessary
Final pressure switch stop unit	Verify settings, replace if necessary
Piston of pneumatic condensate valve sticks	Clean pneumatic condensate valve and restore function, check/replace o-rings, replace valve completely if necessary

Strong compressor vibration

Cause of fault	Remedy
V-belt tension too loose	Tension V-belt
Drive motor / Compressor unit loosely	Retighten mounting screws
Anti vibration mounts used up	Replace
Ground not levelled	Ensure a solid and level ground

Air supply too low

Cause of fault	Remedy
Inlet and outlet valves contaminated / defective	Clean, replace if necessary
Cylinder(s), piston(s) or piston ring(s) used up	Replace
V-belt slips	Tension V-belt
See chapter "Final pressure can not be reached"	See chapter "Final pressure can not be reached"

Compressor overheated

Cause of fault	Remedy
Inlet filter cartridge contaminated	Replace
Ambient temperature too high	Improve room ventilation / Reduce operation times
Cooling air inlet and outlet insufficient	Observe minimum distances (see Installation Instructions)
Air intake hose too long	Reduce length of the air intake hose
Air intake hose diameter too small	Use a larger diameter
Wrong compressor rotation direction	Ensure correct phase rotation, observe rotation direction arrow!
Inlet and outlet valves contaminated / defective	Clean, replace if necessary

Safety valve leaks

Cause of fault	Remedy
Inlet and outlet valves of the following pressure stage defective	Clean, replace if necessary
Sinter filter of the following water separator blocked	Replace
Safety valve leaky	Replace, turn out vent screw if necessary

Oil taste in the air

Cause of fault	Remedy
Mole carbon filter cartridge saturated	Replace
Compressor oil unsuitable	Use prescribed oil quality
Filter cartridge unsuitable	Use prescribed filter type
Cylinder(s), piston(s) or piston ring(s) defective	Replace

Automatic condensate drain defective
Only valid with the option - Automatic Condensate Drain

Cause of fault	Remedy
Solenoid coils defective	Replace
Cable / supply cable defective	Repair, replace if necessary
Timer / relais defective	Replace
Sinter filter of pneumatic condensate valve blocked	Replace
Piston of pneumatic condensate valve sticks	Clean pneumatic condensate valve and restore function, check/replace o-rings, replace valve complete if necessary

Condensate drain starts before reaching final pressure
Only valid with the option - Automatic Condensate Drain

Cause of fault	Remedy
Pressure stages are not as prescribed, control pressure of pneumatic condensate valve too low	Check corresponding inlet and outlet valve, replace if necessary.
Piston sealing of pneumatic condensate valve contaminated / used up	Clean, replace if necessary
Timer / relais settings not correct	Adjust as prescribed
Timer / relais defective	Replace

Compressor stops before final pressure
Only valid with the option - Automatic Condensate Drain

Cause of fault	Remedy
Final pressure switch settings not correct	Correct settings
Opening pressure of the pressure maintaining valve too high	Correct settings
Fuse / circuit breaker has tripped Valid only for E models	Check fusing of the power supply / observe regulations

Filter life not sufficient

Cause of fault	Remedy
Pressure maintaining valve settings not correct	Adjust as prescribed
Filter cartridge unsuitable	Replace by a prescribed filter cartridge type
Filter cartridge too old	Observe expiration date
Filter cartridge packaging incorrect / damaged / already opened. Filter cartridge already partly saturated before change	Store filter cartridges properly, dispose defective cartridges
Operating temperature too high	Ensure sufficient ventilation
Cylinder(s), piston(s) or piston ring(s) defective	Replace

Oil consumption too high

Cause of fault	Remedy
Cylinder(s), piston(s) or piston ring(s) defective	Replace
Compressor oil unsuitable	Use prescribed oil quality
Operating temperature too high	Observe prescribed operating temperatures
Oil leak at the compressor block	Tighten corresponding mounting screws, if necessary replace corresponding paper sealing / o-ring / shaft seal

MAINTENANCE AND SERVICE

Service, Repair and Maintenance

Carry out service and maintenance work exclusively when the compressor is stopped and depressurised. The unit should be leak-checked regularly. Leaks can be preferably localised by using a leak detector spray (if necessary, brush pipes with soapy water).

We recommend that only authorised L&W service technicians carry out service work on the bearing of the compressor (crankshaft and connecting rods).

We urgently recommend that all maintenance, repair and installation work must only be carried out by trained personnel. This is necessary because all maintenance work can not be explained exactly and detailed in this manual.

Only use authentic spare parts for service work.

Any work on the petrol engine should be done in accordance with ist specific handbook.

Danger
Components under pressure, such as hose ends, can quickly come loose when manipulated and can cause potentially fatal injuries due to the pressure surge. Any work on system parts may only be performed in a pressure-compensated state.

Warning
The use of accessories that have not been tested can lead to death or serious injury or damage to the unit. Only use authentic spare parts for service work.

Warning
Carry out maintenance or service work when the unit is switched off and protected against unexpected restart.

Warning
Risk of burns!
Carry out maintenance or service work when the unit has cooled down.

Daily before taking unit into operation

Maintenance work	Type	Quantity	Order No.
Check oil level	-	-	000001
Check condition of all filling hoses	-	-	-
Check filter cartridge lifetime	LW 100 E	1	000644
	LW 100 B	1	002309
Operate unit to final pressure and check function of final pressure switch	-	-	-

Weekly or as needed

Maintenance work	Type	Quantity	Order No.
Check automatic condensate drain, open manual condensate taps	-	-	-
Check/Retorque all connections and bolts	-	-	-
Check V-belt tension and condition	-	-	-

Annually

Maintenance work	Type	Quantity	Order No.
Oil change, if less than 250 operating hours	-	0.5	000001
Check opening pressure of final safety valve	-	-	-
Clean coolers	-	-	-
Clean all oil/water separators, if less than 250 operating hours	-	-	-
Service intake filter (depends on condition - if less than 500 operating hours)	-	-	-

Every 250 operating hours

Maintenance work	Type	Quantity	Order No.
Oil change	-	0.5	000001
Clean oil/water separators	-	-	-

Every 500 operating hours

Maintenance work	Type	Quantity	Order No.
Replace V-belt	LW 100 E/E1 (50Hz)	1	001842
	LW 100 E/E1 (60Hz)	1	001701
	LW 100 B (B&S)	1	008503
	LW 100 B (Honda)	1	001803
Replace o-ring of the DIN filling connector	-	1	001237
Replace o-ring of the revolvable filling hose	-	1	001224
Change intake filter	-	1	001708
Replace sintered metal filter of oil separators	-	1	001735
Replace o-ring of the water separator	-	1	001810
Replace o-ring of the final filter housing	-	1	001769
Check pressure maintaining / non-return valve	-	-	-
Check all connections for leaks	-	-	-

Note
All stated quantities are parts of our 500h and 1000h service kits. You can find an overview on page Service Kits.

Every 1000 operating hours

Maintenance work	Type	Quantity	Order No.
Replace o-rings and gaskets of 1st, 2nd and 3rd stage	Gasket (1st stage)	1	001705
	O-Ring (1st stage)	1	001781
	O-Ring (2nd stage)	1	001768
	O-Ring (2nd + 3rd stage)	2	001777
	O-Ring (3rd stage)	1	001771
	O-Ring (3rd stage)	1	001776
Replace all inlet and outlet valves incl. Gaskets	1st stage	1	001722
	2nd stage	1	001855
	3rd stage	1	001856

Note
All stated quantities are parts of our 1000h service kits. You can find an overview on page Service Kits.

Service Kits

The service kits contain parts for maintenance according to the factory requirements.

The use of the service kits ensures that all required parts are ordered and replaced and gives assurance that all parts are included in the order. Depending on the model and interval, the service kits include parts such as O-Rings, Sinter Filter, Inlet Filter, V-Belts, Silencers, In-&Outlet Valve, Valve Seals and Compressor oil.

Service Kits

Service Kits LW 100 E / E1 for 50 Hz

Compressor	Frequency	Operating Hours	Order No.
LW 100 E / E1	50 Hz	500 h	006709
LW 100 E / E1	50 Hz	1000 h	003604

Service Kits LW 100 E / E1 for 60 Hz

Compressor	Frequency	Operating Hours	Order No.
LW 100 E / E1	60 Hz	500 h	006710
LW 100 E / E1	60 Hz	1000 h	006711

Service Kits LW 100 B

Compressor	Motor	Operating Hours	Order No.
LW 100 B	Briggs & Stratton	500 h	009399
LW 100 B	Briggs & Stratton	1000 h	009400
LW 100 B	Honda	500 h	006712
LW 100 B	Honda	1000 h	006713

Check V-belt tension

The compressors of all LW 100 versions are driven by V-belts. Check correct V-belt tension regularly, adjust if necessary. The V-belt could lose tension during transportation. Please check the V-belt tension before starting the compressor.

Tension V-belts

- Switch off the compressor unit, pull the plug if necessary.
- Tilt the compressor slightly aside.
- Loosen mounting screws (SW13) of the motor flange (Fig. 1).
- Turn clamp nut (SW13) until correct V-belt tension (Fig. 2).

  Rotation direction clockwise: increase V-belt tension.

  Rotation direction anti-clockwise: reduce V-belt tension.

- Tighten mounting screws of the motor flange.
- Check V-belt tension and adjust if necessary.

Fig. 1 - Loosen mounting screws of the motor flange

Correct V-belt tension

Do not tension V-belts too tight. This damages bearings of compressor and motor. The V-belts should only be tensioned until there is no noise caused by slipping during start.

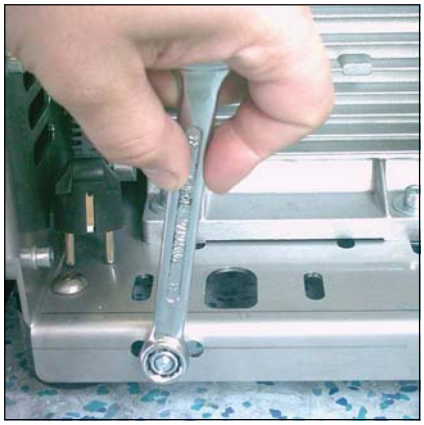

Fig. 2 - Turn clamp nut until correct V-belt tension

Settings

Motor Type	Initial Installation	Operation after running in
Electric motors 50Hz	400 N	300 N
Electric motors 60Hz	350 N	250 N
4 stroke drive motor	400 N	300 N

Compressor Lubrication

Pistons, cylinders, crankshaft and connecting rods are provided with oil by splash lubrication.

Check oil level

Warning
Check oil level daily. Never start the compressor with a too low oil level. Risk of accidental loss, destruction or deterioration.

Check the oil level before each operation of the unit by using the oil dipstick.

Oil level check as follows:

- Pull out oil dipstick
- Wipe off oil residues
- Insert the oil dipstick as far as it will go back into its tube.
- Pull out oil dipstick again
  The oil level should reach the upper maximum marking.
  Refill new compressor oil at least when the oil level reached the middle of the indicated area.
- Insert the oil dipstick as far as it will go back into its tube.

Oil dipstick

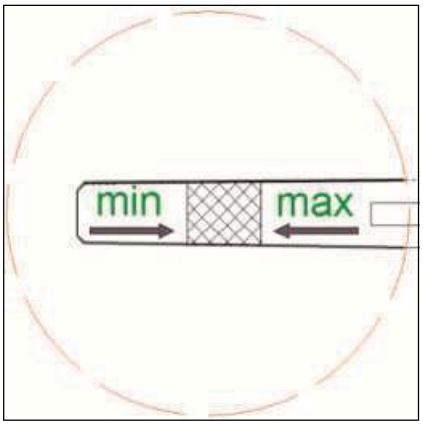

Oil level

Warning
- First oil change after 25 operating hours.

Oil change

Note
We recommend oil change at least once a year - depending on total operating hours.

Oil change as follows:

- Run compressor warm for about 2 minutes.
- Switch off and vent compressor
- Tilt the compressor aside
- Place a suitable oil drain tray under the drain plug
- Screw off oil drain plug carefully
- Drain oil
- Screw in oil drain plug and tighten
- Pull out oil dipstick and fill oil into the nozzle by a funnel
- Check oil level
- Check o-ring of the oil dipstick.
- Insert oil dipstick

The oil change is now completed.

Maintenance intervals

- First oil change after 25 operating hours (total hours).
- All further changes after each 250 operating hours.

Oil and oil capacity

Approx. 500 ml synthetic compressor oil is necessary for one oil change. Only use synthetic compressor oil which is recommended as suitable from L&W. (P/N: 000001)

Only LW 100 B

Drive motor oil change intervals: see manufacturer's specification for the drive motor.
(L&W P/N: 000004)

Manual condensation dump system

Note
The collected condensate can contain oil and has to be disposed according to regulations.

Fig. 1 - Condensate drain valve 1.stage

Oil- / water separators

The compressor comes as standard with a manual condensation dump system. Drain condensate separators every 15 to 30 minutes, depending to air moisture.

Option Automatic Condensate Drain: To release the complete condensate through the black plastic hoses we recommend using a 10 l container at least.

The drain noise can be kept to a minimum by using a silencer.

Fig. 2 - Condensate drain valve 3.stage

Manual drain

Warning
Open valve spindle max. 1.5 turns.
The pressure in the housing can shoot out the valve spindles at high speed.

To drain manually, open the condensate drain valve of the 2nd stage oil / water separator and the condensate drain valve of the filter housing (Fig. 2).

Open valve spindle max. 1.5 turns anti-clockwise. The condensate will be drained.

Then close valve spindle clockwise.

Maintenance intervals

We recommend to clean oil and water separators every 250 operating hours or at least once a year, to check for corrosion damage and to replace o-rings if necessary.

All oil / water separators have an integrated sinter filter which has to be replaced every 500 operating hours.

Oil / water separators 2nd stage - maintenance

Note
Clean all parts thoroughly before assembly.

Maintenance / cleaning of oil / water separators 2nd stage as follows:

- Loosen mounting screws (Fig. 1) and pipe connections (Fig. 2).
- Remove oil/water separator
- Use a suitable tool to turn off and remove separator head (Fig. 3)
- Loosen plastic nut (Fig. 4), change sinter filter (Fig. 5) and screw in plastic nut.
- Change o-ring, previously grease new o-ring (Fig. 6)
- Place separator head into the housing, turn in and tighten
- Connect pipe connections and tighten (Fig. 2).
- Mount and tighten mounting screws (Fig. 1)

The oil / water separator maintenance is now completed.

Fig. 1 - Loosen mounting screws

Fig. 2 - Loosen pipe connections

Fig. 3 - Turn off and remove separator head

Fig. 4 - Plastic nut

Fig. 5 - Change sinter filter

Fig. 6 - Change o-ring

Filter housing

The mole carbon filter housing is installed on the right hand side of the compressor housing.

Inside the filter housing a jet blows air on to the housing wall. Condensation water and oil are led by centrifugal force to the bottom of the housing. Air flows through the mole carbon filter cartridge, which purifies the air from residual moisture and odours.

Filter housing

Filter cartridge

The high-pressure compressor is equipped with an integrated breathing air purification system. Air is compressed up to 330 bar, dried and odour- and tasteless purified. Oil residues are bounded. The breathing air filter cartridge consists of a molecular sieve and activated-carbon filter.

The cartridges of petrol-driven versions are equipped with additional CO/CO_2 filters.

All breathing air filter cartridges are factory vacuum sealed.

We recommend unpacking the filter cartridges just before installation. Filter cartridges which are exposed too long could be saturated with moisture and become unusable.

Maintenance Intervals

Filter cartridges should be changed at the following intervals, at +20°C or more often, depending on humidity and ambient temperature:

- 18 hours for LW 100 E ECO / LW 100 E1 ECO / LW 100 E / LW 100 E1 (Order No.: 000644)
- 16 hours for LW 100 B ECO / LW 100 B (Order No.: 002309)

Filter cartridge change

Filter cartridge change as follows:

- Stop the compressor and open carefully the drain valves. Please wait till the filter housing is completely vented; this procedure takes approx. 1 - 2 minutes
- When no air discharges from the condensate release hoses, the pressure vessels are depressurized.
- Remove the end filter cover (Fig. 1 / Fig. 2). Remove the filter cover by using the filter tool. The housing can not be opened when it is still under pressure.
- After opening the housing, pull out the filter cartridge by the catch (Fig. 3).
- Open the packaging of the new filter cartridge and place it into the filter housing (press slightly).
- Screw the filter housing cover in by using the filter tool and turn it back 1/4 turn. This avoids tightening of the cover due to vibration.

The filter cartridge change is now completed.

Note
Ensure that the old filter cartridge is disposed correctly at an approved waste point.

P/N	Filtering	Models
000644	DIN EN 12021 (Breathing Air)	LW 100 E/E1 ECO LW 100 E/E1
002309	DIN EN 12021 (Breathing Air) inkl. CO/CO2	LW 100 B ECO LW 100 B
002310	Oil / odour removal (<0,1mg/m³)	ALL LW 100
002311	Air / inertgas drying only (<15mg/m³)	ALL LW 100
002476	CNG Filter, drying, oil removal	ALL LW 100

Fig. 1 - Loosen filter housing cover by using the filter tool

Fig. 2 - Remove filter housing cover

Fig. 3 - Pull out the filter cartridge by the catch and insert a new cartridge

Filter housing - maintenance

Note
Clean all parts thoroughly before assembly.

Filter housing maintenance as follows:

- Unscrew filter housing cover by using the filter tool (Fig. 1).
- Change o-ring, previously grease new o-ring (Fig. 2)
- Screw the filter housing cover in by using the filter tool (Fig. 1).

The filter housing maintenance is now completed.

Fig. 1 - Remove/screw in filter cover

Fig. 2 - Change o-ring

Inlet Filter

Note
Dirty filters make air intake difficult and reduce delivery capacity. Risk of compressor overheating.

A paper dry filter is used for the inlet filter.
Check air inlet filter regularly or replace it. Depending on the degree of contamination, the filter inlet can be cleaned by compressed air. Defective air inlet filters should be immediately replaced with a corresponding filter.

Inlet Filter

Maintenance intervals

We recommend that the filter cartridge should be replaced every 500 working hours (depending on pollution grade).

Check or change filter inlet

Note
Clean all parts thoroughly before assembly.

To properly change the filter inlet, proceed as follows:

- Disconnect the crankcase housing at the ventilation hose (Fig. 1).
- Remove mounting screw and pull out filter housing carefully (Fig. 2).
- Clean filter housing and o-rings and check if defective (fissures).
- Place o-ring into the housing (Fig. 3).
- Insert the new cartridge and assemble the housing. Place o-ring into the groove (Fig. 4).
- Place and align the filter housing carefully, inlet port up, hose connector 90° turned to the left (Fig. 5).
- Tighten mounting screw and connect the crankcase housing ventilation hose to the oil fill port (Fig. 6).

The filter inlet change is now completed.

Fig. 1 - Pull off ventilation hose at the oil fill port

Fig. 2 - Pull out filter housing carefully

Fig. 3 - Place o-ring into the filter housing

Fig. 4 - Place o-ring into the groove

Fig. 5 - Place and align filter housing carefully

Fig. 6 - Connect ventilation hose at the oil fill port

Valve heads and valves

Inlet and outlet valves of the specific compressor stages are located between valve head and cylinder. Inlet valves open while piston downstroke; outlet valves open while upstroke or compression stroke.

Valves are subject to normal wear and tear and have to be replaced at specified intervals (depending on specific operating conditions). Dismount valve heads to change valves. All 3 valves are combined valves; inlet and outlet valves are a single unit.

Component parts inlet and outlet valve

Pistons and Cylinders

To guarantee highest economic efficiency and long lifetime of the unit, all compression cylinders of the LW 100 compressors are equipped with hardened, separate cylinder sleeves. These are plugged into the compressor housing and placed over the valve heads screws or valves. Special o-rings prevent air and oil loss.

All pistons are equipped with high quality steel piston rings. This ensures high and constant air supply as well as long service life even when often in use.

Cylinder sleeves

Cooling

The cooling pipes are made of non-corroding material and provide excellent cooling for the air after each stage of compression. The effective cooling system ensures that the air entering the final filter and separator housing is as low as possible. The air increases only 6° from inlet to outlet (at +20° C ambient temperature). This low temperature increase creates long filter times.

The free access to sufficient cooling air must be guaranteed.

Ensure the cooling pipes and the ribs on them are cleaned and free of dirt/dust.

Free compression & guide piston 3rd Stage

Replace inlet and outlet valve 1st stage

Note
The figures of the parts can differ due to the different stages.

Replace the inlet and outlet valve 1st stage as follows:

Remove inlet / outlet valve

- Loosen mounting screws of the fan protection cover (Fig. 1) and remove fan protection cover.
- Remove spring wire clamp of the crankcase ventilation hose (Fig. 2).
- Remove hose.
- Loosen pipe connections.
- Loosen valve head screws (Fig. 3).
- Remove valve head and check if defective (Fig. 4).
- Remove upper valve head gasket and inlet / outlet valve.

Install inlet / outlet valve - see following page

Fig. 1 - Loosen mounting screws of the fan protection cover

Fig. 2 - Remove spring wire clamp

Fig. 3 - Loosen valve head screws

Fig. 4 - Remove valve head

Replace inlet and outlet valve 1st stage - continued from previous page

Warning
The exact alignment of upper and lower valve gasket is very important. Inlet and outlet channels have to be exactly centred.

Install inlet / outlet valve

- Change o-ring, previously grease new o-ring (Fig. 5)
- Place new inlet / outlet valve.
  CAUTION: Ensure correct positioning of the inlet / outlet valve. The engraved "S" (Fig. 6) must point to the inlet filter housing. Ensure that only one inlet channel is visible above.
- Place new upper valve head gasket
  CAUTION: The exact alignment of the upper valve gasket is very important. Inlet and outlet channels have to be exactly centred (Fig. 7).
- Place valve head and spacing sleeves (Fig. 8).
- Screw in mounting screws at the inlet side.
- Slot fan protection cover below and screw in mounting screws at the top.
- Tighten mounting screws crosswise (tightening torque: 10N).
- Tighten pipe connections.
- Fix crankcase ventilation hose with the spring wire clamp (Fig. 9).

The inlet and outlet valves change is now completed.

Fig. 5 - Change o-ring

Fig. 6 - Engraved "S"

Fig. 7 - Inlet and outlet channels have to be exactly centred

Fig. 8 - Place spacing sleeves

Fig. 9 - Fix spring wire clamp

Replace inlet and outlet valves 2nd and 3rd stage

Note
The figures of the parts can differ due to the different stages.

Inlet and outlet valves change as follows:

- Loosen mounting screws of the fan protection cover and remove fan protection cover.
- Loosen pipe connections (Fig. 1).
- Loosen valve head screws (Fig. 2).
- Remove valve head with inlet / outlet valve (Fig. 3).
- Check valve head if defective
- Change o-ring of the compressor block, previously grease new o-ring (Fig. 4).
- Change o-ring of the valve head, previously grease new o-ring (Fig. 5).
- Place new inlet / outlet valve (Fig. 5).
  CAUTION: Observe correct position between valve centre hole and valve head centre pin.
- Place valve head (Fig. 3)
- Tighten mounting screws crosswise (tightening torque: 10N).
- Tighten pipe connections (Fig. 1).
- Slot fan protection cover below and screw in mounting screws at the top.

The inlet and outlet valves change is now completed.

Fig. 1 - Loosen pipe connections

Fig. 2 - Loosen valve head screws

Fig. 3 - Remove valve head with inlet and outlet valve

Fig. 4 - O-ring at the compressor block

Fig. 5 - Valve head

Safety valves

Every pressure stage is equipped with a separate over pressure safety valve. Safety Valves avoid a non permissible high pressure at the specific pressure stages and limit maximum operation pressure of the compressor.

Safety valves

Safety valves are adjusted to:

- 1st Stage: 8 bar
- 2nd Stage: 40 bar
- 3rd Stage: max. final pressure

The adjusted blow-off pressure [bar] of the safety valves is indicated on their housings.

All safety valves are factory sealed with special L&W safety seals to avoid manipulation of the limit value settings.

Safety valves with removed seals have to be immediately checked for the prescribed settings and replaced if necessary.

The safety valve of the final stage is furthermore equipped with a knurled screw to be activated once.

Turning the knurled screw clockwise could vent the valve completely and therefore the final filter housing.

During normal operation conditions, the knurled screw has to be turned anti-clockwise up to the upper stop. An integrated circlip avoids complete unscrewing.

If a safety valve blows off, it indicates problems with either inlet or outlet valve of the following stage.

Note
Replace defective safety valves immediately!

Pressure maintaining / non return valve

The pressure maintaining / non return valve combination is placed in the flow direction after the final filter housing.

Drain valve and pressure maintaining / non return valve

Pressure maintaining valve

The pressure maintaining valve drains a large part of the water content of the compressed air mechanically by ensuring the minimum outlet pressure. This guarantees optimal drying and purification of the breathing air.

After starting the compressor, the pressure inside the final filter housing constantly increases. The pressure maintaining the valve prevents the compressed air from blowing off (final pressure gauge = 0 bar).

When the adjusted opening pressure is reached (150 and 180 bar), the purified compressed air flows via pressure maintaining and non return valve to the filling valve.

The value of the opening pressure of the pressure maintaining valve can be read at the final pressure gauge. When opening pressure is reached, the pressure gauge value increases within a few seconds.

Adjust pressure maintaining valve see next page.

Non return valve

The non return valve which is placed after the pressure maintaining valve, prevents the purified breathing air from flowing back into the filter housing / condensate drain valves.

After compressor stop, the indicated filling pressure remains constant, if the non return valve is working correctly.

.

Adjust pressure maintaining valve

- Vent filling valve and close afterwards (filling pressure gauge 0 bar)
- Start the compressor
- Observe filling pressure gauge
- When the opening pressure of the pressure maintaining valve is reached, the indicated filling pressure increases within some seconds from 0 bar up to the adjusted opening pressure.

If the opening pressure does not reach a value between 150 and 180 bar, adjust the pressure maintaining valve as follows:

Increase opening pressure:

- Vent filling valve (filling pressure 0 bar)
- Loosen clamp screw on the side
- Turn adjusting screw clockwise by using a suitable slotted screwdriver
- Start compressor and check opening pressure, adjust if necessary
- Tighten clamp screw on the side
- Check opening pressure again

Reduce opening pressure:

- Vent filling valve (filling pressure 0 bar)
- Loosen clamp screw on the side
- Turn adjusting screw anti-clockwise by using a suitable slotted screwdriver
- Start compressor and check opening pressure, adjust if necessary
- Tighten clamp screw on the side
- Check opening pressure again

Note
If the adjusted opening pressure of the pressure maintaining valve is higher than the final pressure of the compressor, the final pressure safety valve blows off before pressure maintaining valve opens (final pressure = 0 bar). When valve settings are not clear (e.g. after disassembly / repair), start the adjustment with a low basic setting (turn adjusting bolt 3 full turns in).

O-rings - filling valve and filling hose

Check o-rings from filling valve and filling hose regularly and change if necessary.

Note
Clean all parts thoroughly before assembly.

O-ring at the filling valve

- Change o-ring, previously grease new o-ring (Fig. 1)

Fig. 1 - O-ring at the filling valve

O-ring at the filling hose

- Remove filling hose from the filling valve (Fig. 2)
- Change o-ring, previously grease new o-ring
- Connect filling hose to the filling valve and tighten

.

Fig. 2 - O-ring at the filling hose

Motor change

The drive motors of the LW 100 series are generally interchangeable.

Warning
Do not carry out modifications when the unit is hot.

Motor change as follows:

- Switch off the compressor unit, pull the plug if necessary
- Remove V-belt cover
- Remove mounting screws of the motor flange
- Remove motor tensioner bolt
- Remove V-belt
- Remove motor v-belt pulley
- Remove motor carefully
- Place new motor
- Mount motor v-belt pulley
- Mount flange mounting screws and tighten nuts slightly
- Insert motor tensioner bolt
- Check/Ensure the alignment of both key slots (motor & compressor)
- Tension V-belt
- Tighten flange mounting screws
- Place V-belt cover and tighten mounting screws
- Ensure clearance of the V-belt cover

Note
Due to different construction heights, the motor carrying handle of the LW 100 E / LW 100 E1 versions is not identical to the LW 100 B. We recommend to use the specified carrying handle in case of modification.

Test of pressure equipment

According to the Pressure Equipment Directive (PED 97/23/EC) and TÜV Darmstadt (German supervising authorities). State: 10th of December, 2005

Subject pressure equipment with a product permissible operating pressure [bar] x content volume [litres] from 200 up to max. 1000.

Example: Filter housing 0.37 l

Maximum operating pressure: 350 bar

Content volume: 0.37 litres

350 bar x 0.37 litres = 129.5

129.5 is smaller than the minimum of 200 -> therefore no test by a licensed expert is required.

1. Examination after 5 years by a qualified person or authorized organisations.

Visual inspection, inside and outside.

2. Examination after 10 years by a qualified person or authorized organisations.

Visual inspection, inside and outside.

In addition, a water pressure test is carried out at 1.5 times of the permissible vessel operating pressure.

The test methods described in point 1 and 2 must be repeated periodically - as described above.

Max. numbers of load cycles for operation with max. allowable pressure variation

Final pressure [bar]	Load cycles	Operating hours [h]
225	43750	10930
330	4400	1100

MAINTENANCE RECORDS

Introduction form for the Operator

No.	Surname, Name	Date	Place	Signature	Instructor

By adding themselves to this list, the person that signs it confirms having been given a yearly introduction/instruction about the function and operation of the compressor unit.Furthermore, they have be informed about the relevant safety rules and regualtions (TRG, DGRL, BetrSichV, GSG, GSGV).

Top up oil, oil change

Date	Operating hours	Oil quantity [l]	Name

Cartridge change

Date	Operating hours	Difference	Name

Maintenance work

Description	Date, signature

Replaced Parts

Designation	Part number	Date, signature

Note
Please check the specific handbook of the petrol engine regarding conservation / storage, de-conservation and commissioning of the LW 100 B compressors.

Conservation / storage of the compressor

If the compressor unit is not to be used for an extended period of time, we recommend to carry out the following work before storage time:

- Run the compressor at 200 bar filling pressure for approximately ten minutes (control the flow with the filling valve to maintain constant pressure).
- Replace compressor oil, open filling valve(s) and run compressor for a few minutes.
- Stop compressor and open drain valves (depending on the compressor type, this may happens automatically).
- Remove top cap of final filter housing: clean threat, grease o-ring and threat with a food grade grease or silicone grease. Close filter housing.
- Remove intake filter cartridge and undo intake pipes on all valve heads.
- Start compressor unit.
- Spray a few drops of compressor oil into intake connectors.
- Stop compressor unit and insert intake filter cartridge.
- Bring intake pipes back in position and fix connections and nuts. Close filling- and drain valves.
- Store the compressor in a cool dry place free from dust and contamination.
  A dust cover is recommended as long as condensation can be avoided.
- If compressor unit should be stored for a period of more than one year, an oil change is strongly recommended before it's been re-used.
- Fuel driven units only: fill up fuel tank to top level to avoid corrosion.

Note
Please check the specific handbook of the petrol engine regarding conservation / storage, de-conservation and commissioning of the LW 100 B compressors.

De-conservation, commissioning

After the compressor has been stored, the following steps are to be taken:

- If compressor hasn't been used for longer than 12 months, we strongly recommend an oil change before any use.
- Replace intake filter cartridge and check oil level.
- Clean compressor unit, check for foreign objects.
- Check condition and tension of V-belts, replace if necessary.
- Check condition of filling hoses, replace if necessary.
- Secure hoses against whipping and open filling valves and run compressor for approximately 10 minutes.
- Check condition of final filter cartridge, replace if necessary.
- Close filling valves and run compressor up to final pressure.
- Check safety valve relief pressure of final stage and/or pressure switch setting.
- Check all connections and pipe work for leaks.

Once all above steps are completed, compressor unit is now ready for use.

Transportation instructions

- Parts which need to be dismantled for transport purposes must be carefully replaced and secured before taking into operation.
- The transport may only be carried out by trained personnel.
- For transportation, only use lifting devices and equipment with sufficient lifting power.
- Do not stand or work under suspended loads.
- Also separate from minor relocation machinery / system of any external energy supply. Before recommissioning, reconnect the machine to the mains according to regulations.
- When recommissioning, proceed according to the operating instructions..

Disposal

The product must be disposed in accordance with national waste disposal regulations and by an appropriate waste disposal company.

Electric and electronic components

EU-wide regulations for the disposal of electric and electronic appliances which have been defined in the EU Directive 2002/96/EC and in national laws are effective from August 2005 and apply to this device.

Common household appliances can be disposed by using special collecting and recycling facilities. However, as this device has not been registered for household usage, it must not be disposed of through these means.

The device can be returned to L&W. Please do not hesitate to contact us if you have any further questions on this issue.

ERSATZTEILLISTEN / SPARE PARTS LISTS
DETAILANSICHTEN / DETAILED VIEWS

Inhaltsverzeichnis - Table of Contents

Gesamtansicht - Overall View 3

Konsole - Console 6

Antriebsabdeckung - Fan Guard, Drive Cover 8

Ansaugfilter - Intake Filter 10

Kompressorblock 12

Kurbelwelle - Crankshaft 16

Kolben 1. Stufe - Piston 1st Stage.pub 18

Kolben 2. Stufe - Piston 2nd Stage 20

Kolben 3. Stufe - Piston 3rd Stage 21

Saug- & Druckventile - In-& Outlet Valves 22

Kühlrohr 2. Stufe - Cooling Pipe 2nd Stage 23

Lüfterrad - Cooling Fan 25

E-Motor 27

4-Takt Motor - 4-Stroke Motor 29

Wasserabscheider - Water Separator 31

Endfiltergehäuse - Final Filter Tower 33

Enddruck-Sicherheitsventil - Final Pressure Safety Valve 35

Füllschlauch - Filling Hose 37

Füllventil - Filling Valve 38

Füllventilhalter - Bracket for Filling Valve 40

Baugruppe: Gesamtansicht / Overall View

Best.-Nr. / Order No.	Benennung	Description
001712	Kühlrohr (Rippenrohr), 3 Stufe	Cooling Pipe (finned), 3rd st.
001848	Rohrschelle (Ø15-18mm)	Pipe Clamp, 8mm Finned Pipe
003687	Füllventil (drehbar) mit Manometer, 200bar	Filling Valve (rotatable) c/w gauge, 200bar
003688	Füllventil (drehbar) mit Manometer, 200bar	Filling Valve (rotatable) c/w gauge, 300bar

B

Baugruppe: Gesamtansicht / Overall View

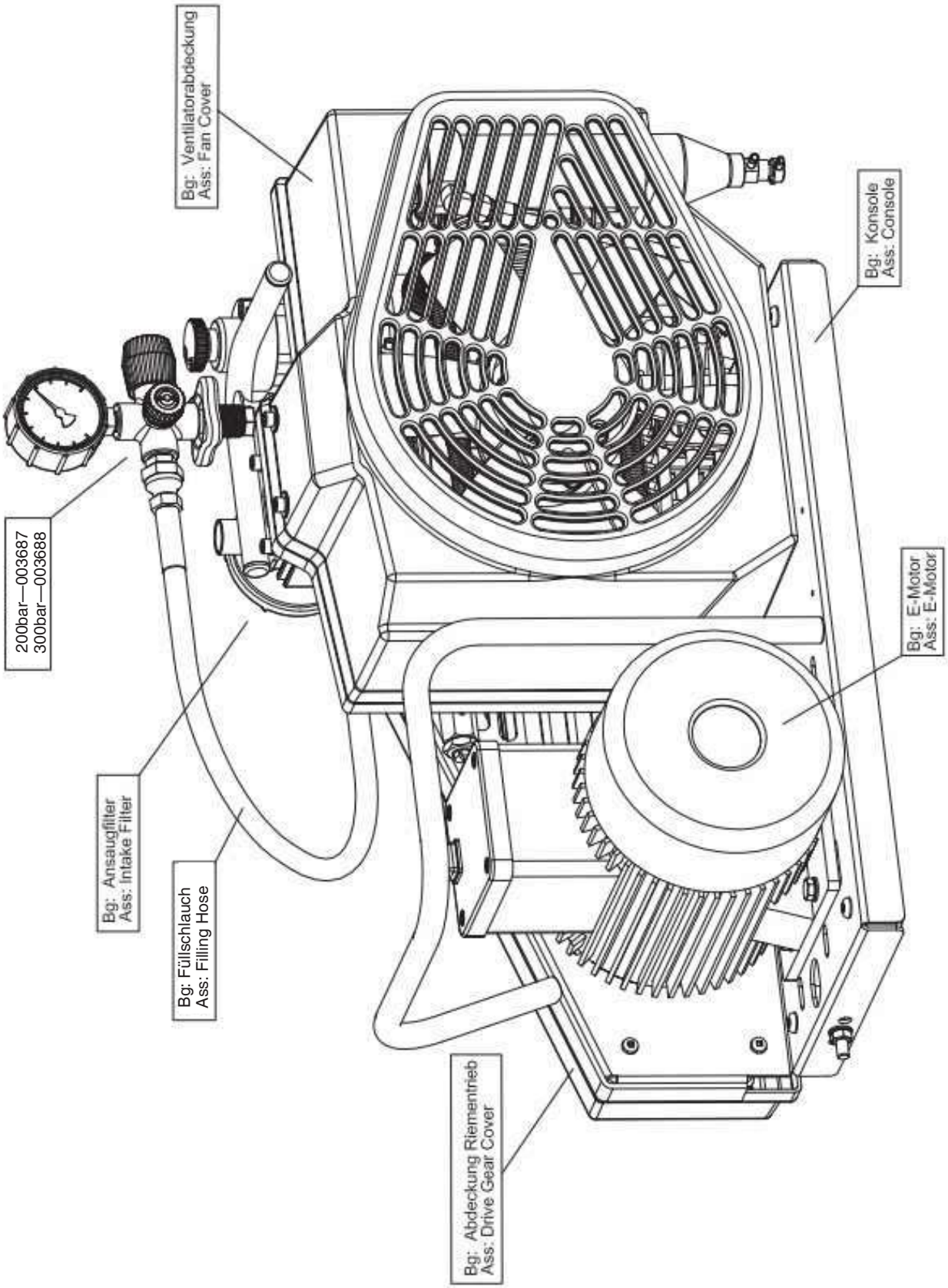

Baugruppe: Gesamtansicht / Overall View

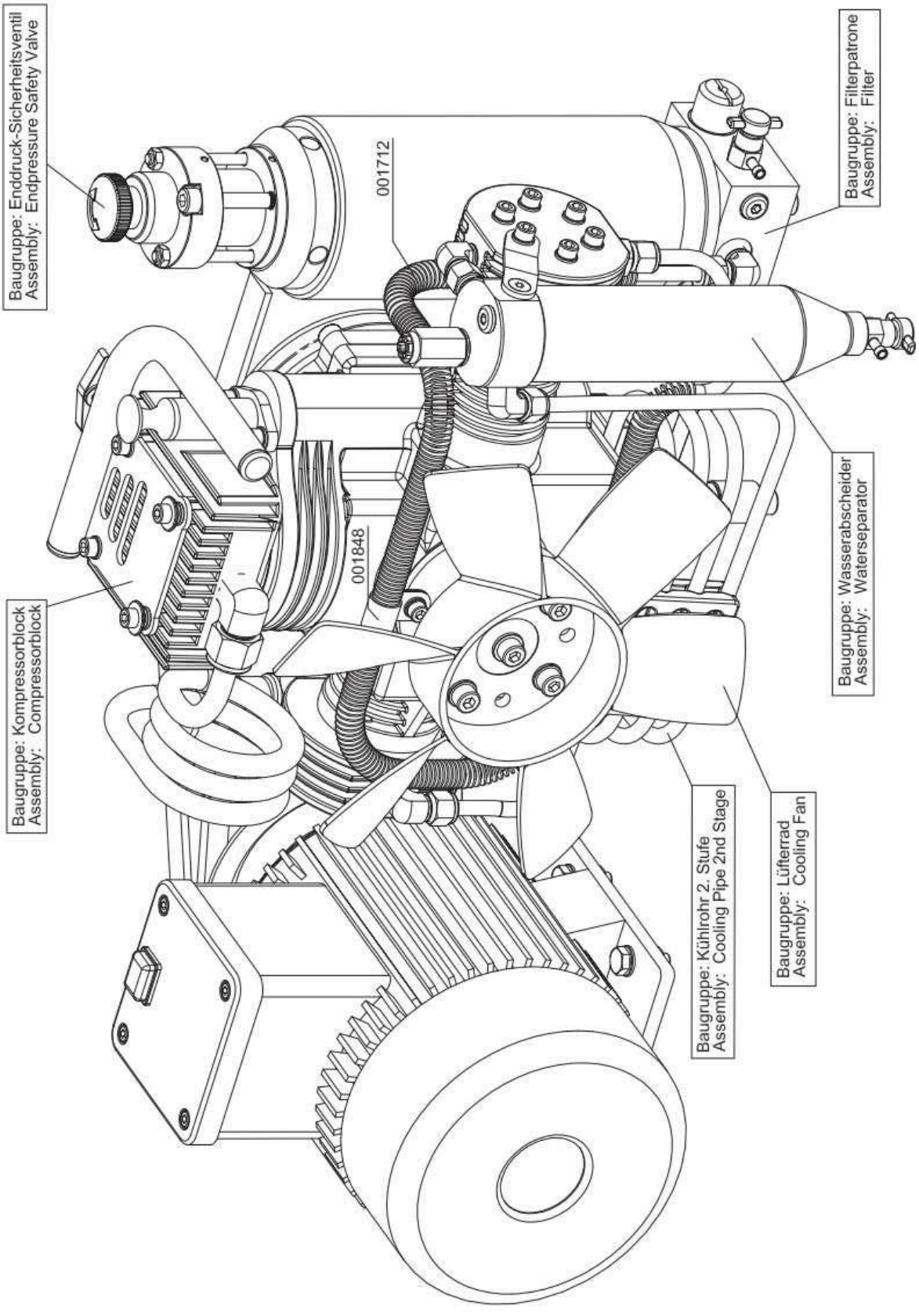

Baugruppe: Konsole / Assembly: Console

Best.-Nr. / Order No.	Benennung	Description
000498	U-Scheibe A6	Washer A6
001030	Zylinderschraube	Allen Bolt
001040	Zylinderschraube	Allen Screw
001181	U-Scheibe A8	Washer A8
001713	Standfuss, Gummipuffer	Rubber Stand
001758	I-6kt-Schraube,	Hexagon Screw
001801	Aufsteckstutzen, Kompressorabdeckung	PVC Stud Plastic Cover
001806	Halteband Filtergehäuse - inkl. Gummi	Jubillee Clip Filter Housing
001845	Tragebügel	Carrying Handle
001846	Tragebügel	Carrying Handle
001847	Kompressorkonsole (Edelstahl)	Compressor Console (Stainless Steel)
001860	Dichtgummistreifen	Rubber Stripe
006744	Kompressorkonsole (Aluminium)	Compressor Console (Aluminum)

Baugruppe: Konsole / Assembly: Console

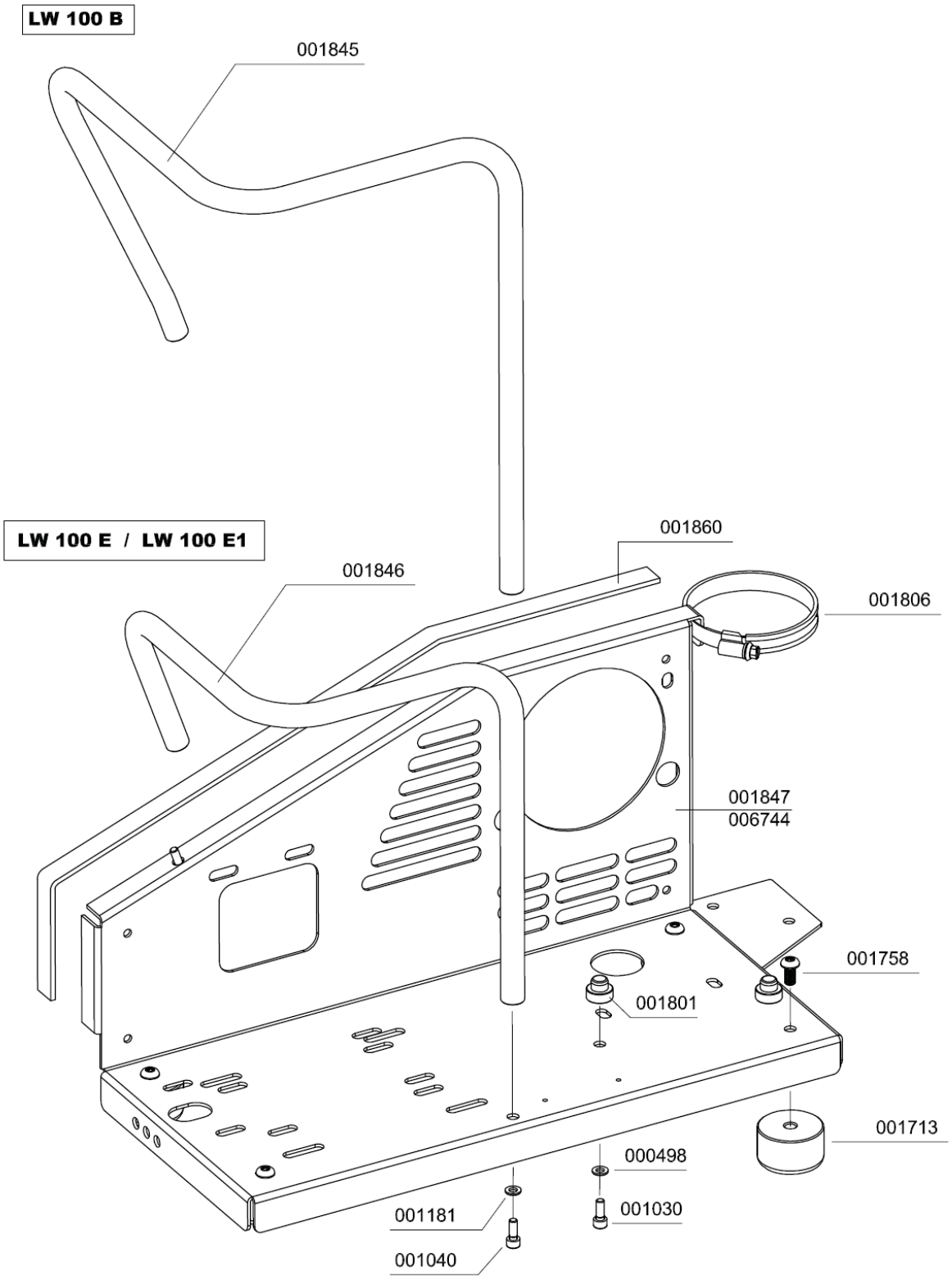

Baugruppe: Antriebsabdeckung / Assembly: Fan Guard & Drive Cover

Best.-Nr. / Order No.	Benennung	Description
001794	Abstandshalter für Keilriemenschutz	Spacer V-Belt Cover
001830	Abdeckung Riementrieb schwarz	Cover V-Belt black
001831	Ventilatorschutzabdeckung schwarz	Pulling Fan Cover (Black)
001857	Gummitülle, Aufsteckgum. Ventilatorsch.	Rubber Gaiter
001859	Befestigungsschraube Antriebsabdeckung	Fixing Bolt V-Belt Cover
006602	Ventilatorschutzabdeckung LW grün	Pulling Fan Cover - green L&W
006603	Abdeckung Riementrieb MSA grün	Cover V-Belt - green MSA
006604	Abdeckung Riementrieb gelb	Cover V-Belt - yellow
006605	Abdeckung Riementrieb L&W grün	Cover V-Belt - green L&W
006606	Ventilatorschutzabdeckung	Pulling Fan Cover - green MSA
006607	Ventilatorschutzabdeckung	Pulling Fan Cover - yellow

B

Baugruppe: Antriebsabdeckung / Assembly: Fan Guard & Drive Cover

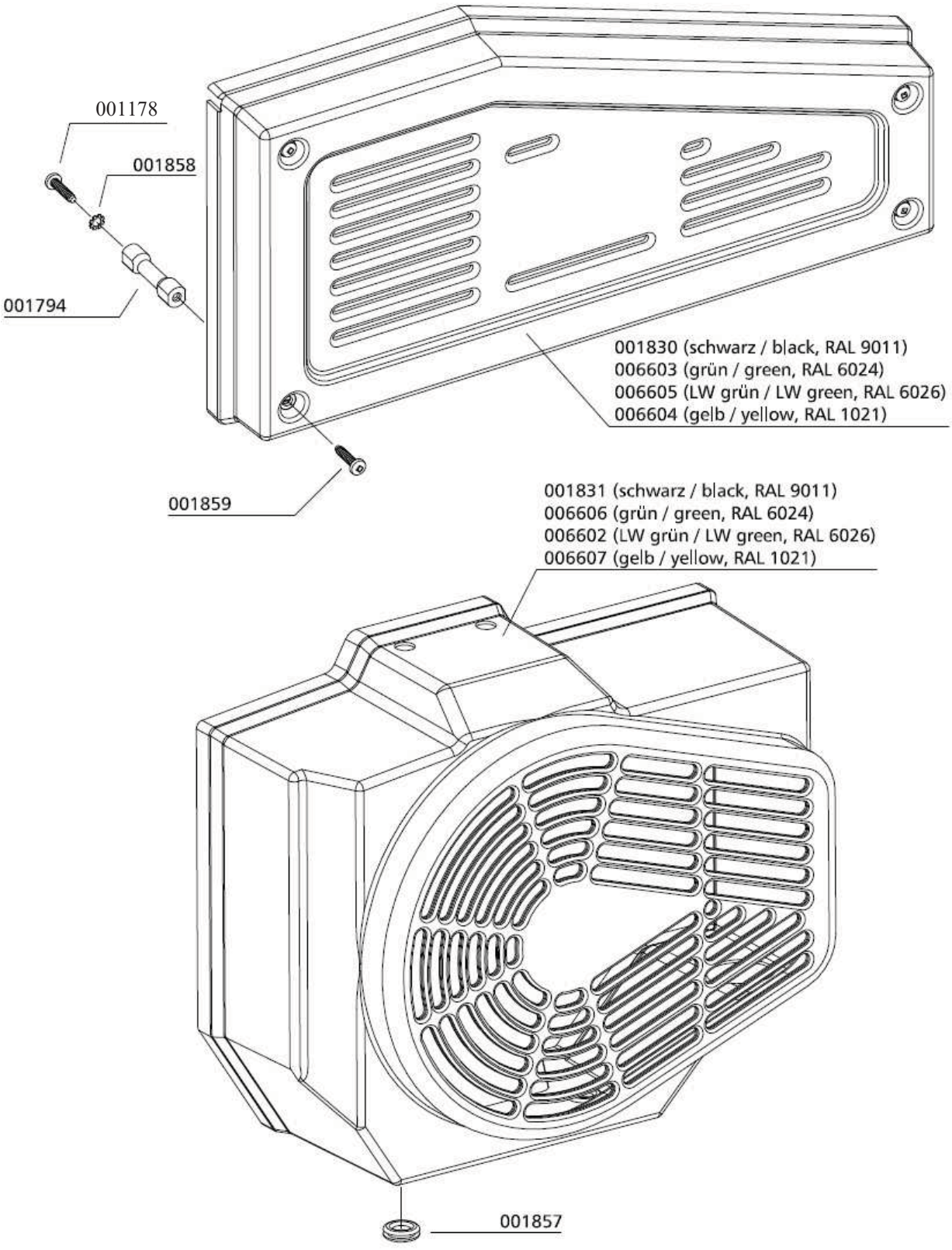

Baugruppe: Ansaugfilter / Assembly: Intake Filter

Best.-Nr. / Order No.	Benennung	Description
001707	Ansaugfiltergehäuse LW 100	Air Intake Filter Housing
001708	Ansaugfilterpatrone	Air Intake Filter Cartridge
001748	Stehbolzen	Threaded Stud
001772	Flügelmutter, PVC-schwarz m. Messingein.	Winged Nut, PVC black
001778	O-Ring, Oeleinfüllrohr	O-Ring, oil filler pipe
001782	O-Ring, Ansaugfiltergehäuse	O-Ring
001807	Schlauch (Kurbelgehäuse-Entlüftung)	Hose Crankcase Vent
001829	Deckel Ansaugfiltergehäuse	Cover air intake housing
006846	Schlauchschelle	Hose Clamp

Baugruppe: Ansaugfilter / Assembly: Intake Filter

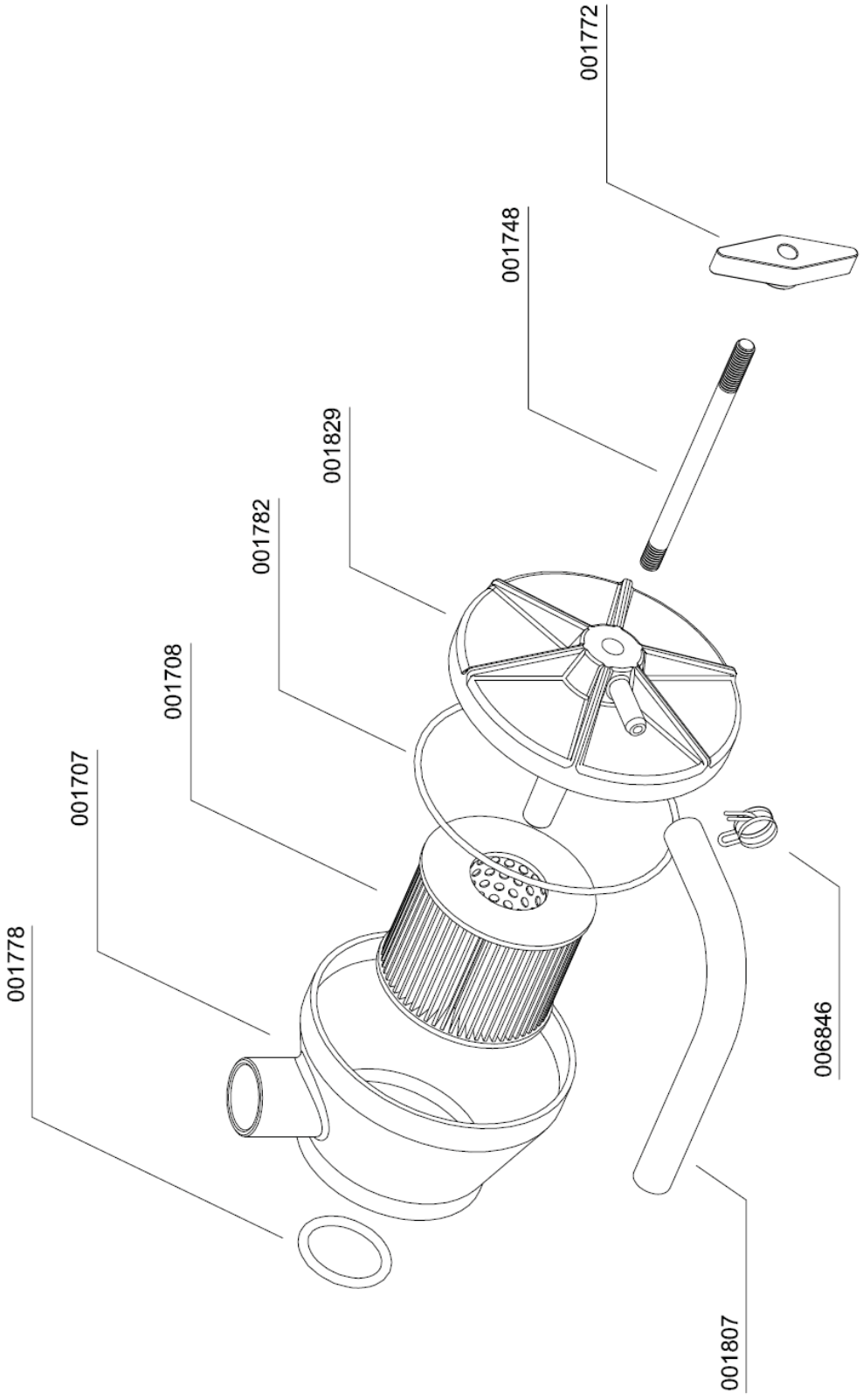

Baugruppe: Kompressorblock / Assembly: Compressor Block

Best.-Nr. / Order No.	Benennung	Description
000498	U-Scheibe A6	Washer A6
000738	Verschraubung	Connection
000765	Schneidring	Olive Seal
000766	Mutter	Nut
000794	T-Verschraubung	Connection with fixed nut
000796	Verschraubung	Elbow Connection
000801	Mutter	Union Nut 10L
000802	Schneidring 10mm	Olive Seal Ring
000839	Verschlussstopfen	Plug
001009	Zylinderschraube	Allen Bolt
001012	Zylinderschraube	Allen Bolt
001029	Zylinderschraube	Allen Bolt
001030	Zylinderschraube	Allen Bolt
001041	Zylinderschraube	Allen Screw
001042	Zylinderschraube	Allen Screw
001043	Zylinderschraube	Allen Screw
001178	U-Scheibe A6	Washer A6
001182	U-Scheibe A8	Washer A8
001691	Zylinderbuchse 3. Stufe	Piston Sleeve, 3rd Stage
001692	Zylinderbuchse, 2. Stufe	Piston Sleeve, 2nd Stage
001694	Zylinderbuchse 1. Stufe	Piston Sleeve Ø60mm
001698	Ventilkopf 1. Stufe	Valve Head 1st Stage
001699	Ventilkopf 2. Stufe	Valve Head 2nd Stage
001700	Ventilkopf 3. Stufe	Valve Head 3rd Stage
001702	Kurbelgehäuse	Crankcase
001703	Kühlrohr, Alu, 1. zu 2. Stufe	Cool.Pipe alloy 1st to 2nd St.
001705	Ventilkopfdichtung 1. Stufe	Valve Head Gasket, 1st Stage
001709	Oelmessstab	Oil Dip Stick LW 100
001710	Oeleinfüllrohr	Oil Filler Tube

Baugruppe: Kompressorblock / Assembly: Compressor Block

Best.-Nr. / Order No.	Benennung	Description
001723	Schwungrad, Riemenscheibe-Kompres.	Flywheel, pulley compressor
001726	Gehäusedeckel	Bearing Cover
001727	Lagerdeckel	Bearing Cover
001728	Radial-Wellendichtring	Shaft Seal
001729	Kurbelwellen Hauptlager	Main Bearing Crankshaft
001766	O-Ring, Lagerdeckel	O-Ring Bearing Cover
001767	O-Ring, Zylinderbuchse, 1. Stufe	O-Ring Cylind. Sleeve, 1st St.
001768	O-Ring, Zylinderbuchse 2. Stufe	O-Ring Cylind. Sleeve 2nd St.
001771	O-Ring	O-Ring, Viton
001775	O-Ring, Oelmessstab	O-Ring, oil dipstick
001776	O-Ring, Ventilkopf 3. Stufe	O-Ring, valve head, 3rd Stage
001777	O-Ring	O-Ring,valve head, 2.+3. Stage
001778	O-Ring, Oeleinfüllrohr	O-Ring, oil filler pipe
001779	O-Ring, Zylinderbuchse 3. Stufe	O-Ring, cylinder liner,3rd St.
001780	O-Ring, Gehäusedeckel	O-Ring, Crankcase cover
001781	O-Ring, Ventilkopf 1. Stufe	O-Ring, valve head, 1nd Stage
001790	U-Scheibe	Washer
001791	Distanzscheibe Ventilkopf 1. Stufe	Spacer, 1st Stage
001800	PVC-Verschlussstopfen für Tragegriff	PVC Plug for carrying handle
001804	Distanzstück (Konsole / Kompressorblock)	Spacer (Console / Block)
001809	Sicherheitsventil 1. Stufe	Safety Valve 1st Stage
001832	Tragegriff, kompl. mit Stopfen	Carrying Handle c/w plug
001850	Distanzröhrchen, Ventilkopf 1. Stufe	Spacer Tube Valve Head 1st St.

Baugruppe: Kompressorblock / Assembly: Compressor Block

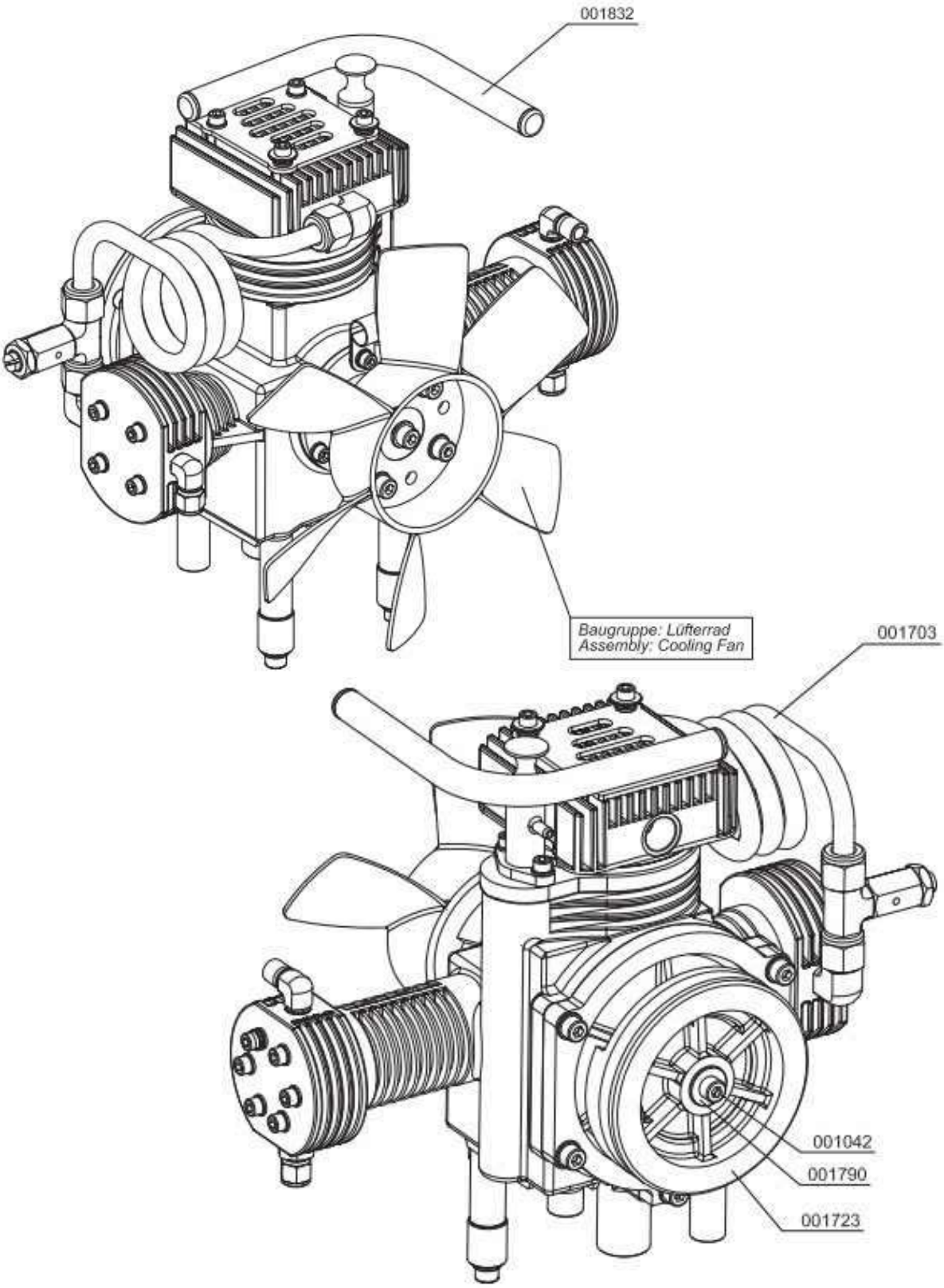

Baugruppe: Kompressorblock / Assembly: Compressor Block

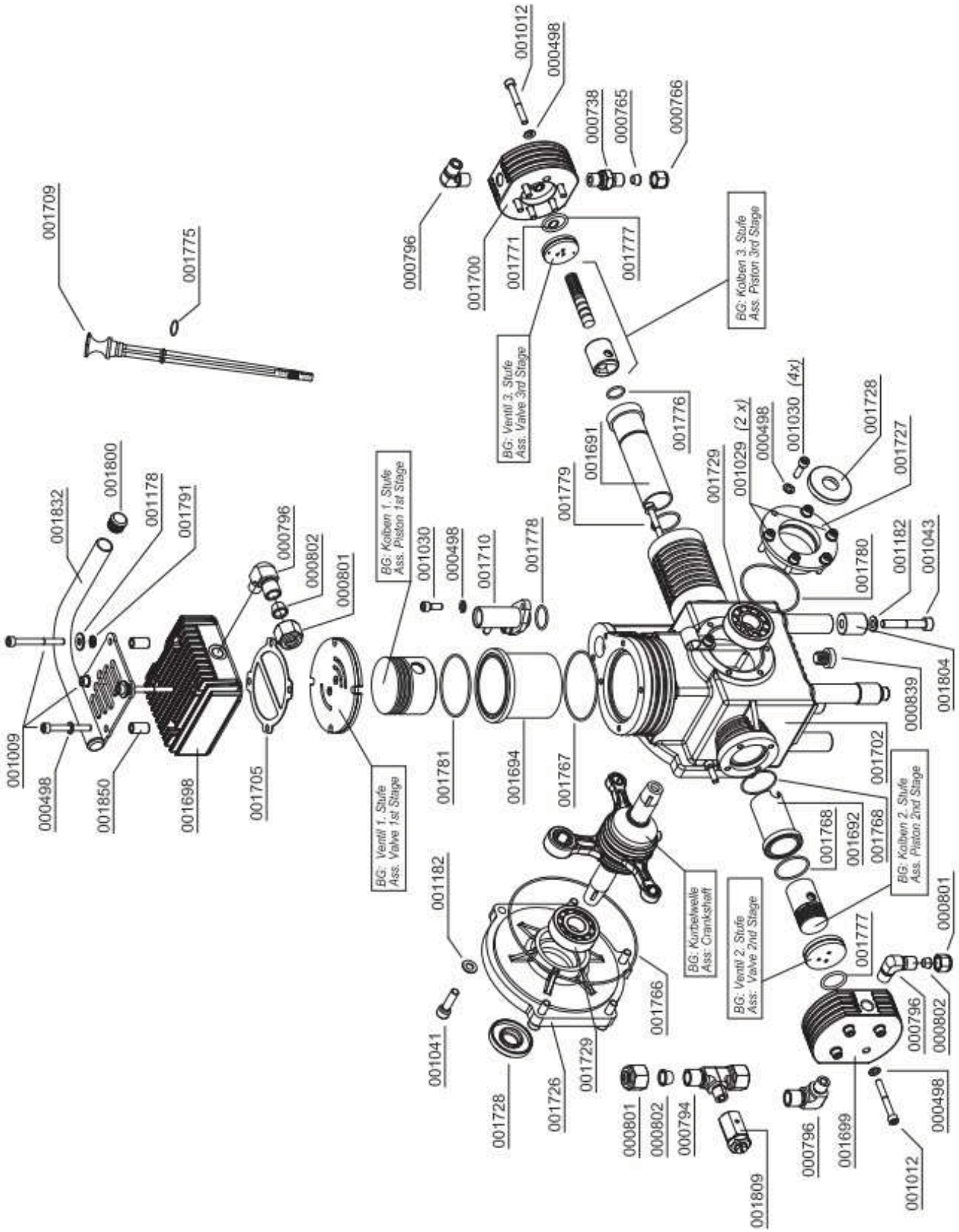

Baugruppe: Kurbelwelle / Assembly: Crankshaft

Best.-Nr. / Order No.	Benennung	Description
001342	Sicherungsring	Circlip A30
001697	Kurbelwelle	Crankshaft
001730	Pleuel 1. Stufe	Connecting Rod 1st Stage
001731	Pleuel 2. und 3. Stufe	Connecting Rod 2nd / 3rd Stage
001734	Pleuellager	Small End Bearing
001739	Lagerdistanzscheibe	Thrust washer - small
001740	Distanzscheibe zwischen den Pleuel,	bracket spacer (connecting rods)
001741	Anlaufscheibe Pleuel	Thrust Washer (connecting rods)
001754	Scheibenfeder	Woodruff Key - Disc shaped

Baugruppe: Kurbelwelle / Assembly: Crankshaft

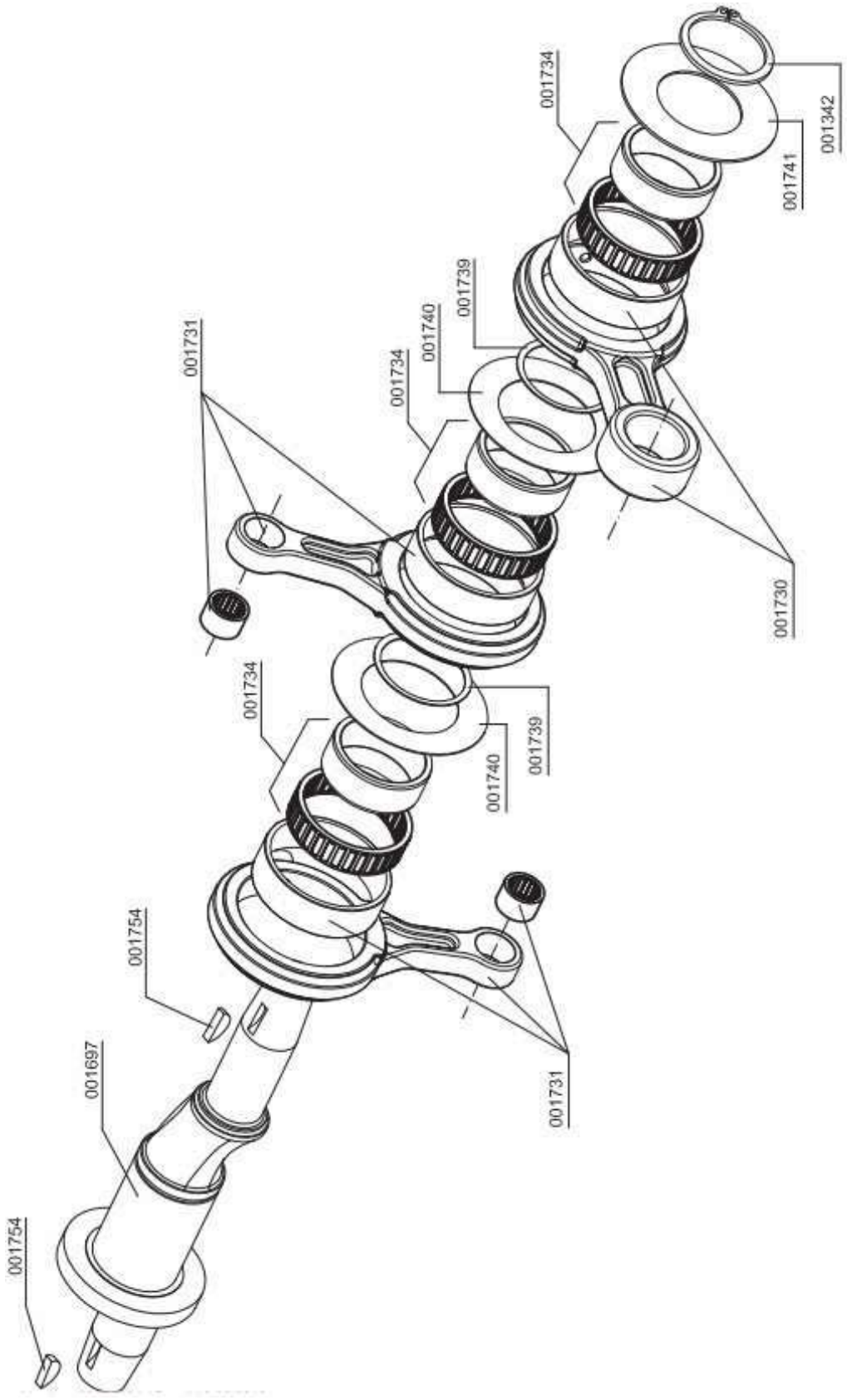

Baugruppe: Kolben 1. Stufe / Assembly: Piston 1st Stage

Best.-Nr. / Order No.	Benennung	Description
001696	Kolben 1. Stufe	Piston 1st Stage
001756	Kolbenbolzen, 1. Stufe	Piston Pin 1st Stage
001757	Sicherungsring	Circlip I15
001853	Kolbenringe 1. Stufe Satz	Piston Ring Set, 1st Stage

B

Baugruppe: Kolben 1. Stufe / Assembly: Piston 1st Stage

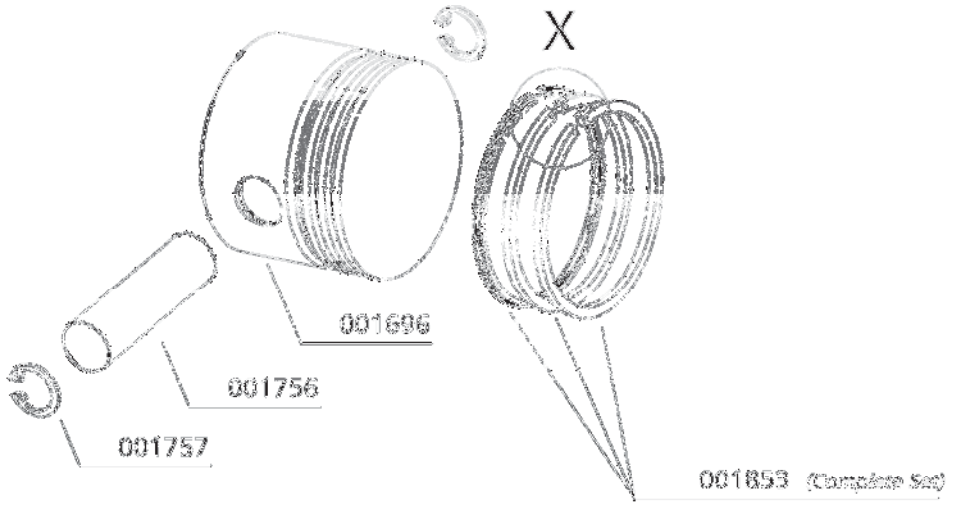

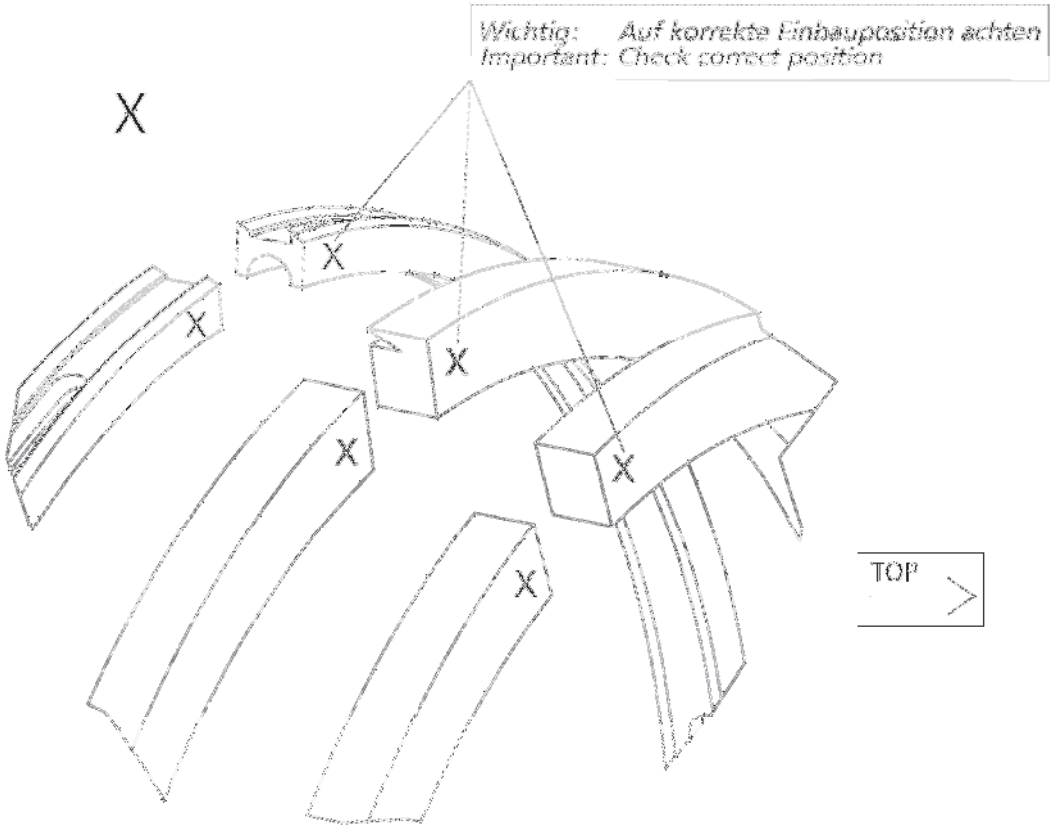

Baugruppe: Kolben 2. Stufe / Assembly: Piston 2nd Stage

Best.-Nr. / Order No.	Benennung	Description
009331	Kolben, Kolbenringe, Kolbenbolzen und Sicherungsring	Piston, Piston Rings, Piston Pin and Circlip

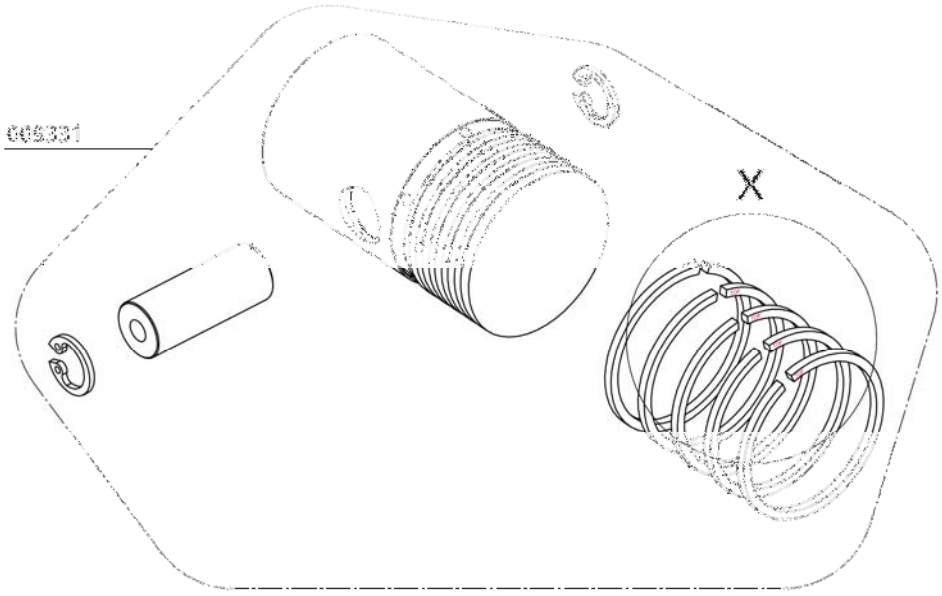

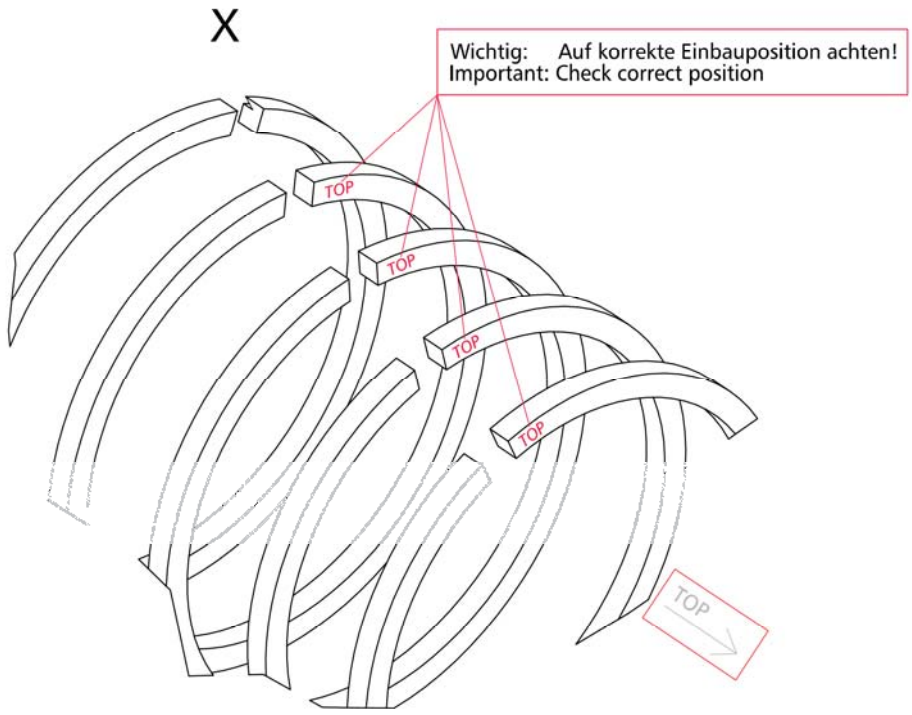

Baugruppe: Kolben 3. Stufe / Assembly: Piston 3rd Stage

Best.-Nr. / Order No.	Benennung	Description
001351	Sicherungsring	Circlip I10
001755	Kolbenbolzen, 2. + 3. Stufe	Piston Pin 2nd/3rd Stage
001763	Führungskolben 3. Stufe	Guide Piston 3rd Stage
007699	Kolben inkl. Kolbenringe (3. Stufe)	Piston 3rd Stage c/w rings

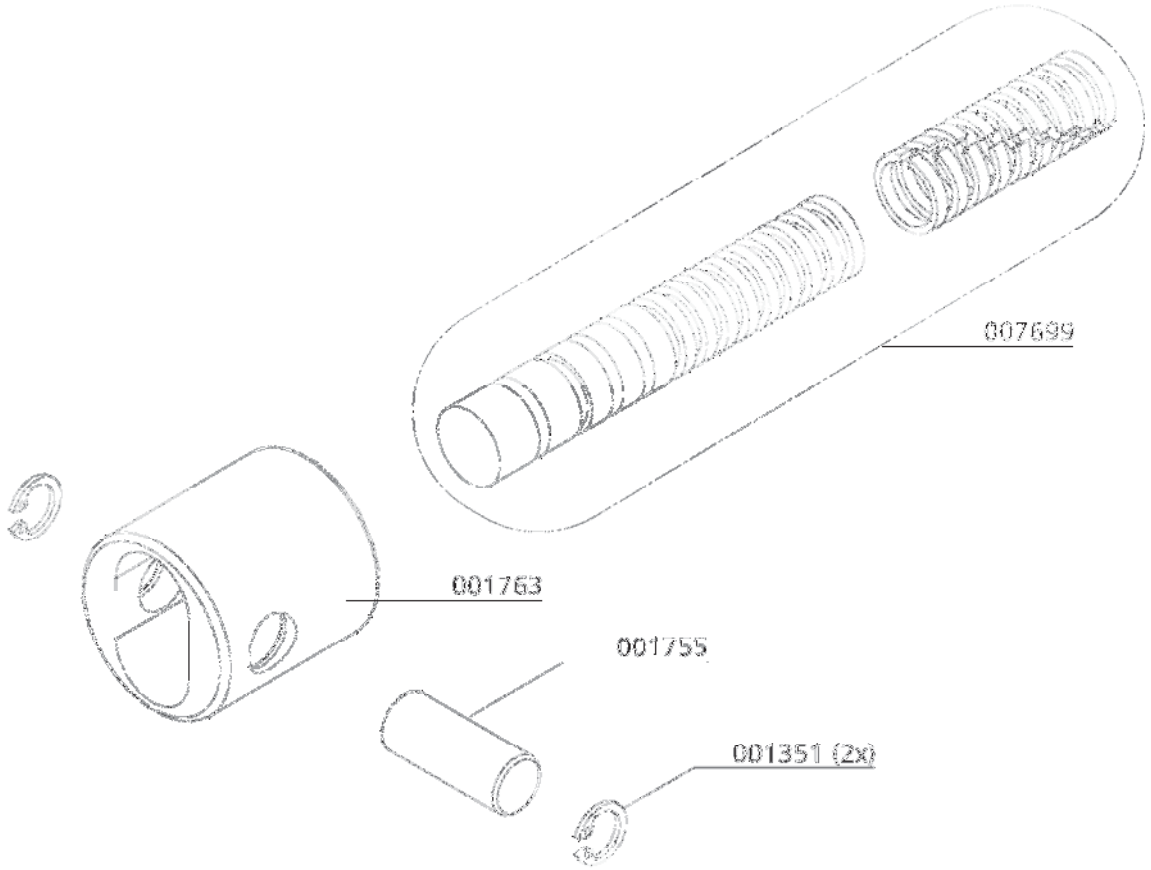

Baugruppe: Saug- & Druckventile / Assembly: In– & Outlet Valves

Best.-Nr. / Order No.	Benennung	Description
001722	Saug- & Druckventil 1. Stufe	In- & Outlet Valve 1st Stage
001855	Saug- & Druckventil 2. Stufe	In- & Outlet Valve 2nd Stage
001856	Saug- & Druckventil 3. Stufe	In- & Outlet Valve 3rd Stage

1. Stufe

1st stage

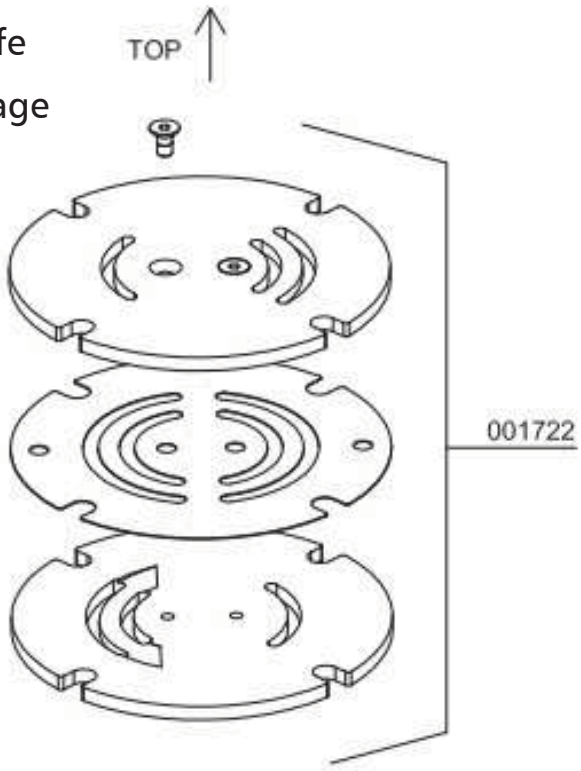

2. Stufe

2nd Stage

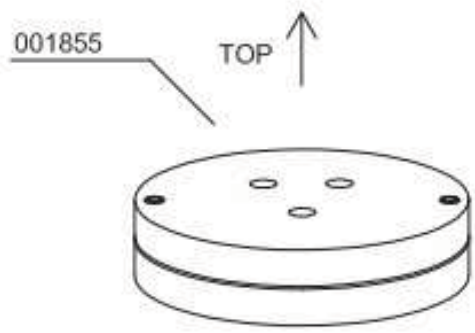

3. Stufe

3rd Stage

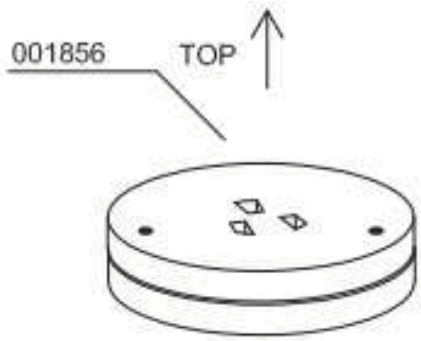

Baugruppe: Kühlrohr 2. Stufe / Assembly: Cooling Pipe 2nd Stage

Best.-Nr. / Order No.	Benennung	Description
001041	Zylinderschraube	Allen Screw
001159	Stoppmutter M8	Lock Nut M8
001181	U-Scheibe A8	Washer A8
001704	Kühlrohr, Alu, 2. Stufe zu Wasserabsch.	Cool.Pipe alloy 2nd to 3rd St.
001714	Klemmstück 3er, Alu, Kühlrohr 2. Stufe	Tube Clamp alloy, 3 pipe vers.
001715	Klemmstück 4er, Kühlrohr 2. Stufe	Tube Clamp alloy. 4 pipe vers.
001851	Senkschraube	Counter Sunk Screw

Baugruppe: Kühlrohr 2. Stufe / Assembly: Cooling Pipe 2nd Stage

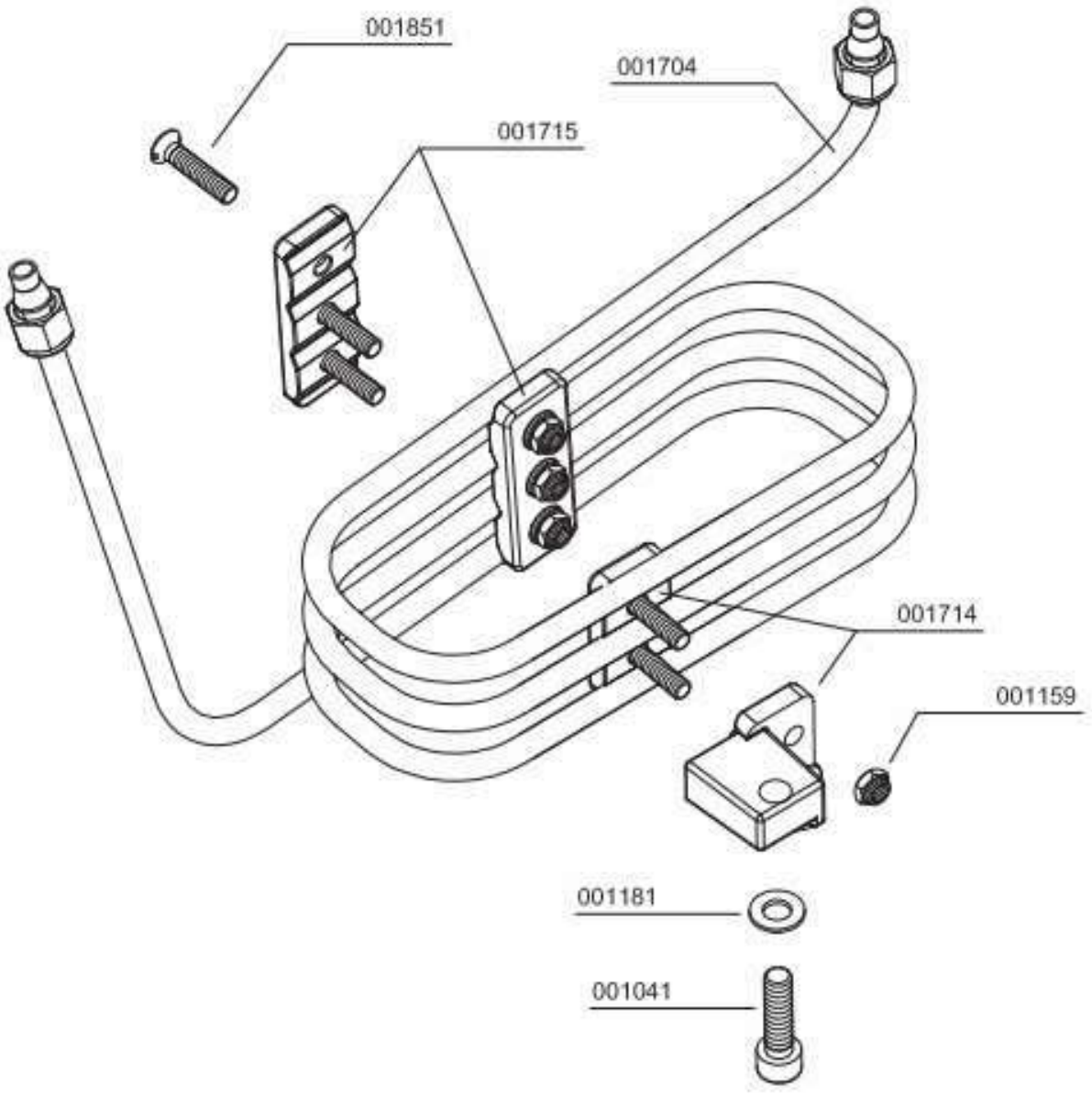

Baugruppe: Lüfterrad / Assembly: Cooling Fan

Best.-Nr. / Order No.	Benennung	Description
001039	Zylinderschraube	Allen Screw
001042	Zylinderschraube	Allen Screw
001181	U-Scheibe A8	Washer A8
001706	Lüfterrad (Standard Ausführung)	Cooling Fan, Stadard Version
001711	Gegengewicht Kurbelwelle	Counterweigth Crankshaft
001790	U-Scheibe	Washer

Baugruppe: Lüfterrad / Assembly: Cooling Fan

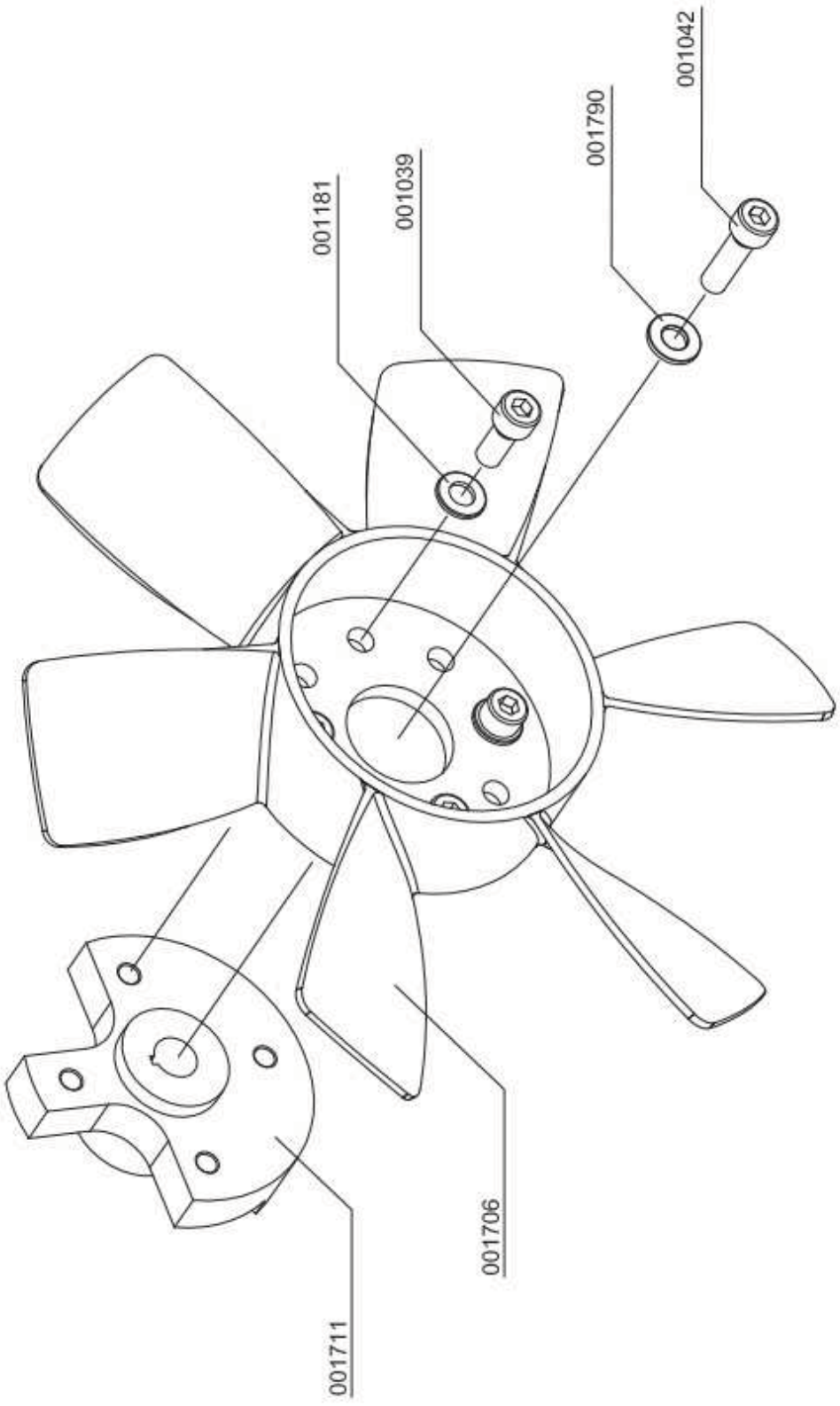

Baugruppe: E-Motor / Assembly: E-Motor

Best.-Nr. / Order No.	Benennung	Description
001044	Zylinderschraube	Allen Screw
001045	Zylinderschraube	Allen Screw
001158	Mutter M8	Nut M8
001159	Stoppmutter M8	Lock Nut M8
001181	U-Scheibe A8	Washer A8
001701	Keilriemen 60Hz	V-Belt 60Hz
001724	Riemenscheibe, E 50Hz	Pulley, E 50Hz
001725	TL Buchse Riemenscheibe, Spannbuchse	Pulley Hub
001797	Ankerschraube	V-Belt Tensioning Bolt
001833	Antriebsmotor, inkl. Riemenscheibe, 400V 50/60Hz	Drive Motor c/w pulley, 400V 50/60Hz
001842	Keilriemen 50Hz	V-Belt 50Hz
001843	Keilriemenscheibe, E1 50Hz	Pulley, E1 50Hz
001844	Passfeder	Woodruff Key
001852	Antriebsmotor, inkl. Riemenscheibe, 230V 50Hz	Drive Motor c/w pulley, 230V 50Hz
003603	Keilriemenscheibe, E1 60Hz	Pulley, E1 60Hz
003671	Antriebsmotor, inkl. Riemenscheibe, 230V 60Hz	Drive Motor c/w pulley, 230V 60Hz
005061	Keilriemenscheibe, E 60Hz	Pulley, E 60Hz
005062	TL Buchse Riemenscheibe LW100 E1 60Hz	Pulley Hub, E1 60Hz

Baugruppe: E-Motor / Assembly: E-Motor

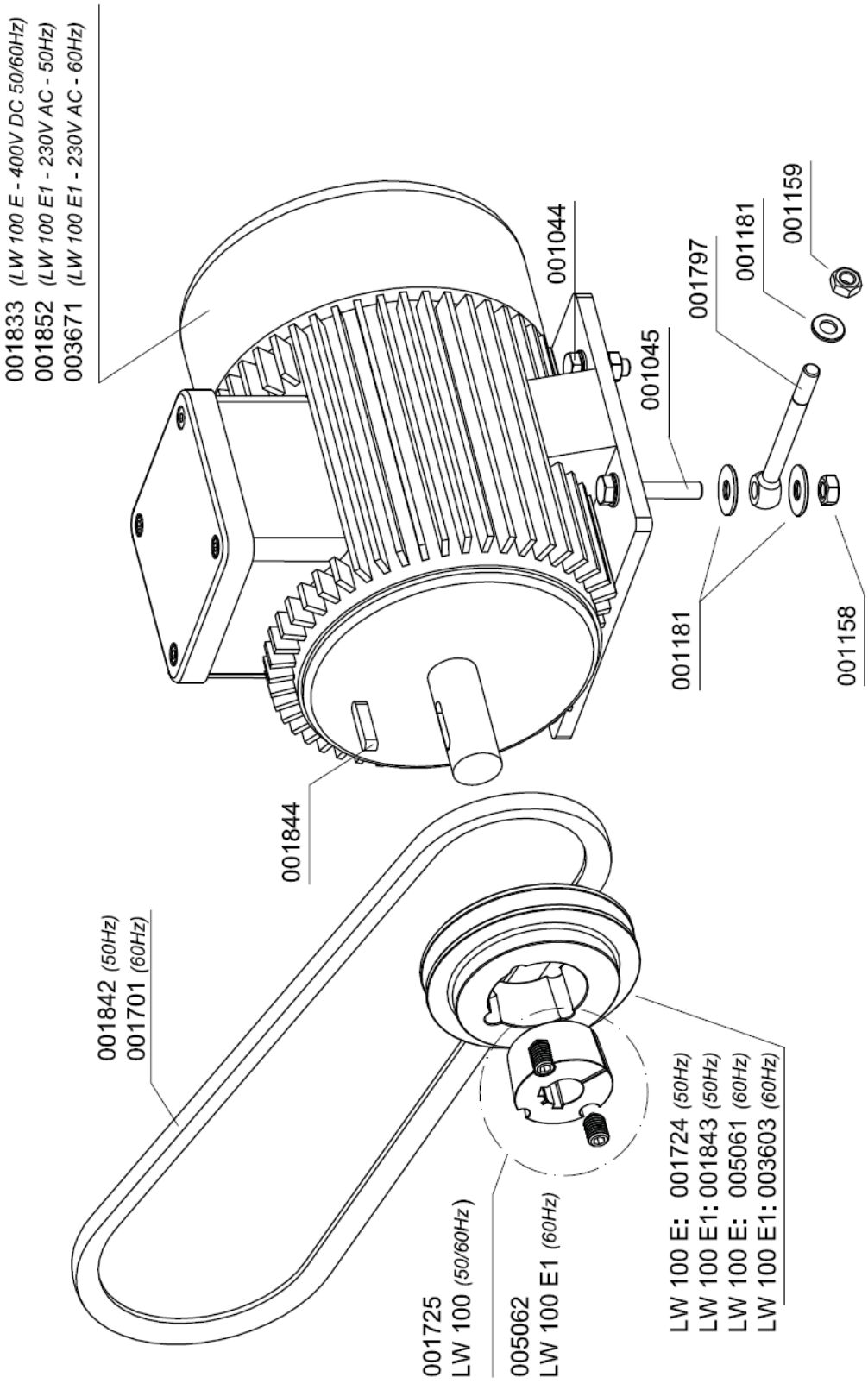

Baugruppe: 4-Takt Motor / Assembly: 4-Stroke Motor

Best.-Nr. / Order No.	Benennung	Description
001044	Zylinderschraube, M8x40mm DIN912 8.8 ZN	Allen Screw,
001046	Zylinderschraube, M8x50mm DIN912 8.8 ZN	Allen Bolt, M8x50mm DIN912 8.8 ZN
001159	Stoppmutter	Lock Nut M8
001181	U-Scheibe, A8 DIN125 ZN	Washer, A8 DIN125 ZN
001182	U-Scheibe, A8 DIN9021 ZN	Washer, A8 DIN9021 ZN
001790	U-Scheibe, DIN6340 ZN	Washer, DIN6340 ZN
001793	Passfeder	Woodruff Key
001796	Ankerschraube	V-Belt Tensioning Bolt
001802	Keilriemenscheibe 2-teilig, B&S	Pulley, B&S
001803	Keilriemen, Honda, B&S VANGUARD (bis 05/2014)	V-Belt, Honda, B&S VANGUARD (until 05/2014)
001805	Motorklemmleiste	Motor Strip, scorp. mot.holder
001849	Antriebsmotor 4,5 kW, Briggs & Stratton Vanguard	Motor 4.5kW, Briggs & Stratton
001864	TL-Buchse für Riemenscheibe, Spannbuchse	TL-Bush for Pulley
005061	Keilriemenscheibe	Pulley
007108	Antriebsmotor Honda GX200, inkl. Riemenscheibe	Drive motor Honda GX200, c/w pulley
008503	Keilriemen, B&S (ab 06/2014)	V-Belt, B&S (since 06/2014)

Baugruppe: 4-Takt Motor / Assembly: 4-Stroke Motor

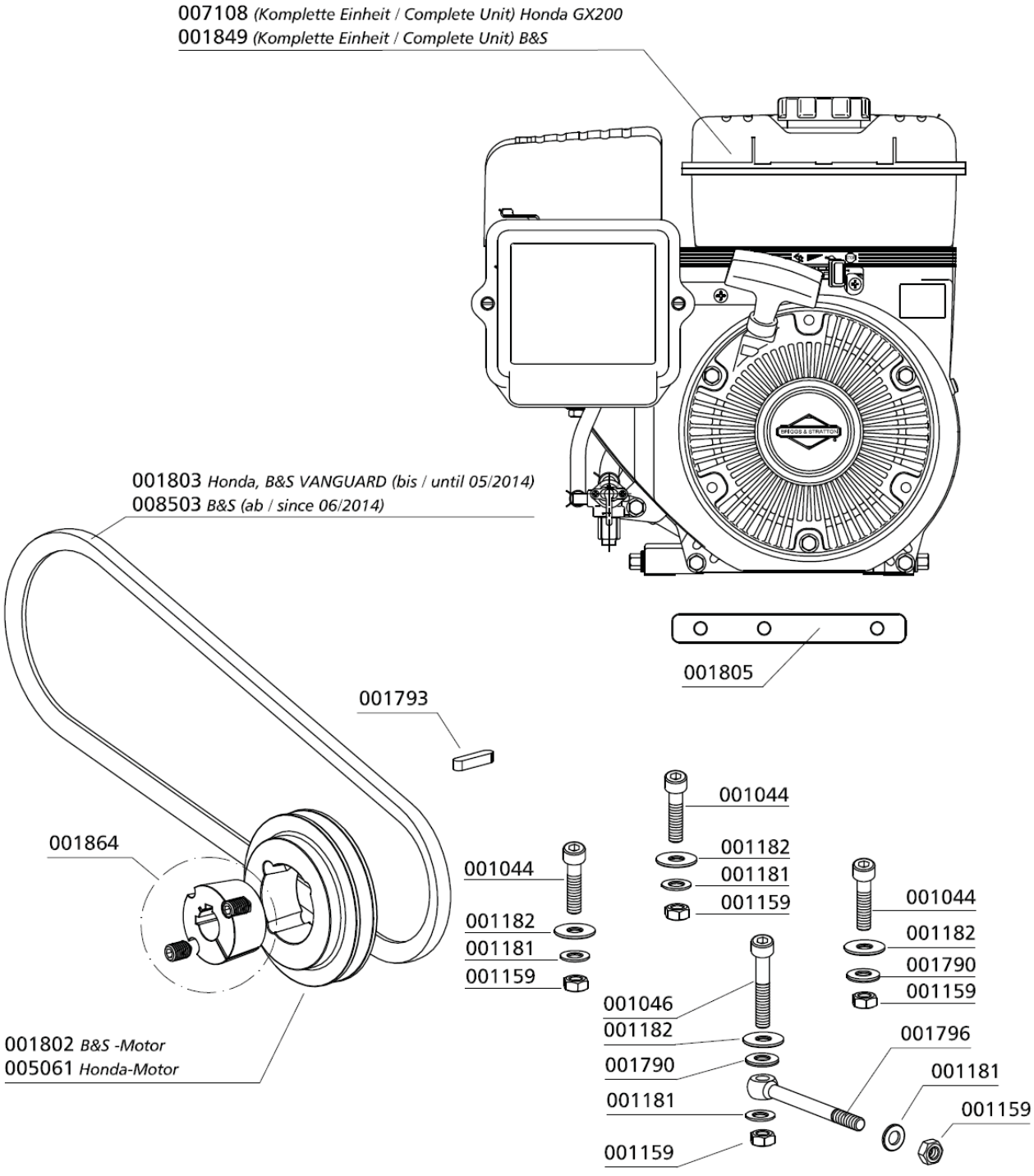

Baugruppe: Wasserabscheider / Assembly: Water Separator

Best.-Nr. / Order No.	Benennung	Description
000749	Verschraubung	Connection with fixed nut
000796	Verschraubung	Elbow Connection
000801	Mutter	Union Nut 10L
000802	Schneidring 10mm	Olive Seal Ring
000837	Verschlussstopfen	Plug
001322	CU-Ring	Copper Seal Ring
001720	Kopf Wasserabscheider 2. Stufe	Top Water Separator 2nd Stage
001721	Rohr Wasserabscheider 2. Stufe	Tube Water Separator 2nd Stage
001735	Sinterfilter Wasserabscheider	Sinter Filter Water Separator
001736	Kunststoffmutter, Wasserabscheider	Plastic nut water separator
001737	Trichter, Wasserabscheider 2. Stufe	Water Deflector 2nd stage
001738	Stehbolzen (Messing)	Threaded Stud, Brass
001798	Senkschraube	Counter Sunk Screw
001810	O-Ring, Wasserabscheider 2. Stufe	O-Ring Water Separator 2nd Stage
001811	Düse Wasserabscheider 2. Stufe	Jet Water Separator 2nd Stage
001812	Querstrebe, Wasserabscheider 2. Stufe	Bracket Water Separ. 2nd Stage
001813	Sicherheitsventil 2. Stufe	Safety Valve 2nd Stage
001861	Dichtring AL	Alloy Seal Ring
003077	Kondensatablassventil G1/4" AG	Condensate Drain Valve G1/4"

B

Baugruppe: Wasserabscheider / Assembly: Water Separator

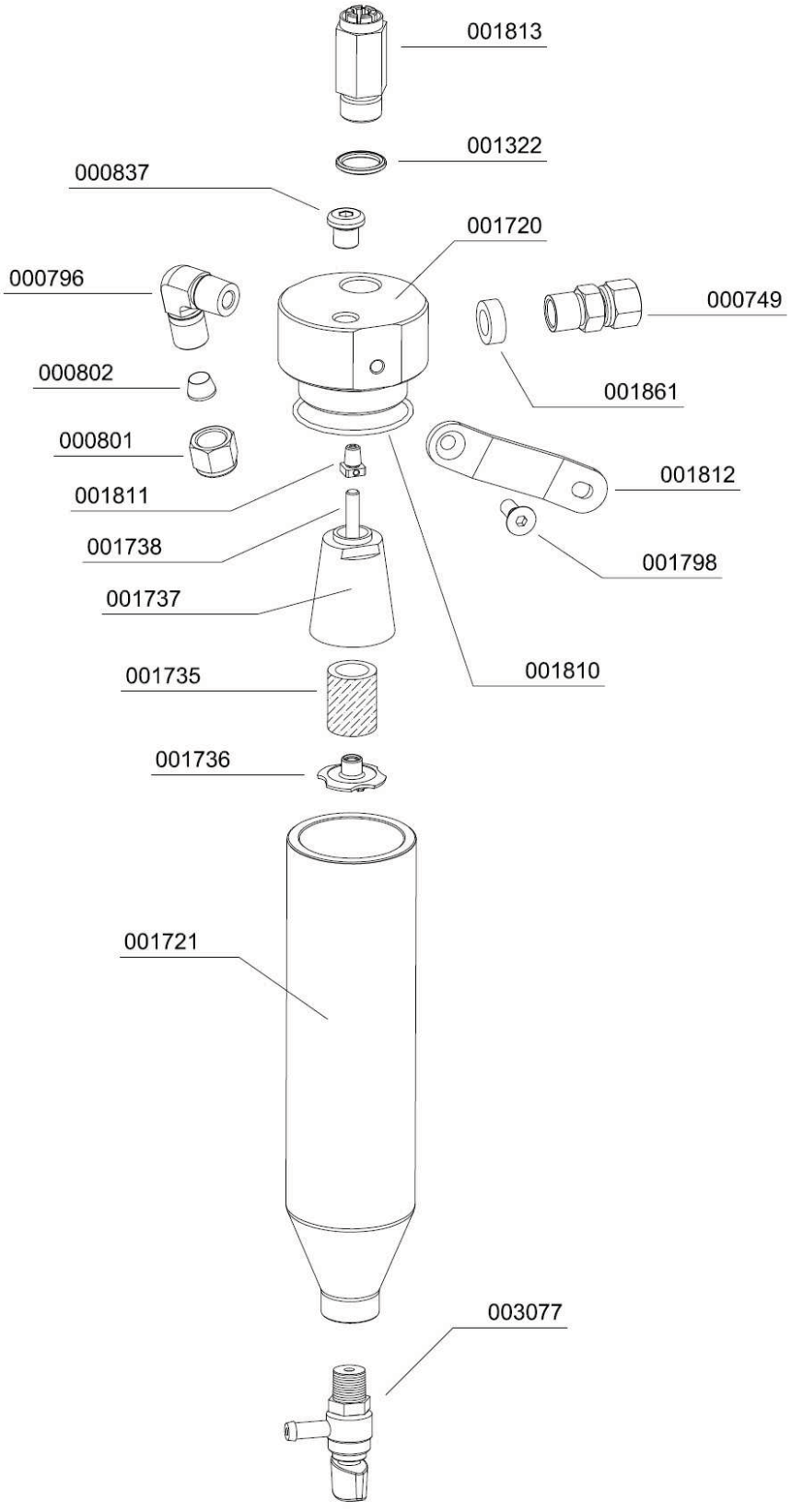

Baugruppe: Endfiltergehäuse / Assembly: Final Filter Tower

Best.-Nr. / Order No.	Benennung	Description
000506	Druckfeder	Spring
000508	USIT Ring	Gasket Ring U-Sit
000516	Nutring, Druckhalte-/Rückschlagventil	Seal Ring PMV
000517	Feder	Coil Spring PMV
000518	Unterlegscheibe DIN 125, M5	Washer, M5, brass
000519	Dichtkappe, Druckhalte-Rückschlagventil	Plastic Seal Piston PMV
000644	Filterpatrone	BA Filter Cartridge
000761	Verschraubung	Elbow Connection
000783	Verschraubung	Straight Connection
000797	Verschraubung	Elbow Connection
000837	Verschlussstopfen	Plug
000941	Madenschraube	Worm Screw
001080	6-kant Schraube	Hexagon Screw
001718	Innenrohr Filtergehäuse	Inner Tube Filter Housing
001742	Druckstift , Ø5x40mm	Pressure Pin
001743	Einlassverschraubung	Inlet Connection
001744	Einstellschraube	Adjusting Bolt
001745	Düsenrohr, HD-Filter	Inlet Jet
001753	Patronenstift, Zylinder	Cartridge Pin
001769	O-Ring, Filtergehäuse	O-Ring Filter Housing LW 100
001788	Federdruckstück	Spring Adapter
002309	Filterpatrone	Filter cartridge
002474	Filtergehäuse kompl. mit DHRV, Schlüssel	Filter housing c/w PMNRV
003006	O-Ring, Druckhalteventil	O-Ring, PMV
003077	Kondensatablassventil G1/4" AG	Condensate Drain Valve G1/4"

Baugruppe: Endfiltergehäuse / Assembly: Final Filter Tower

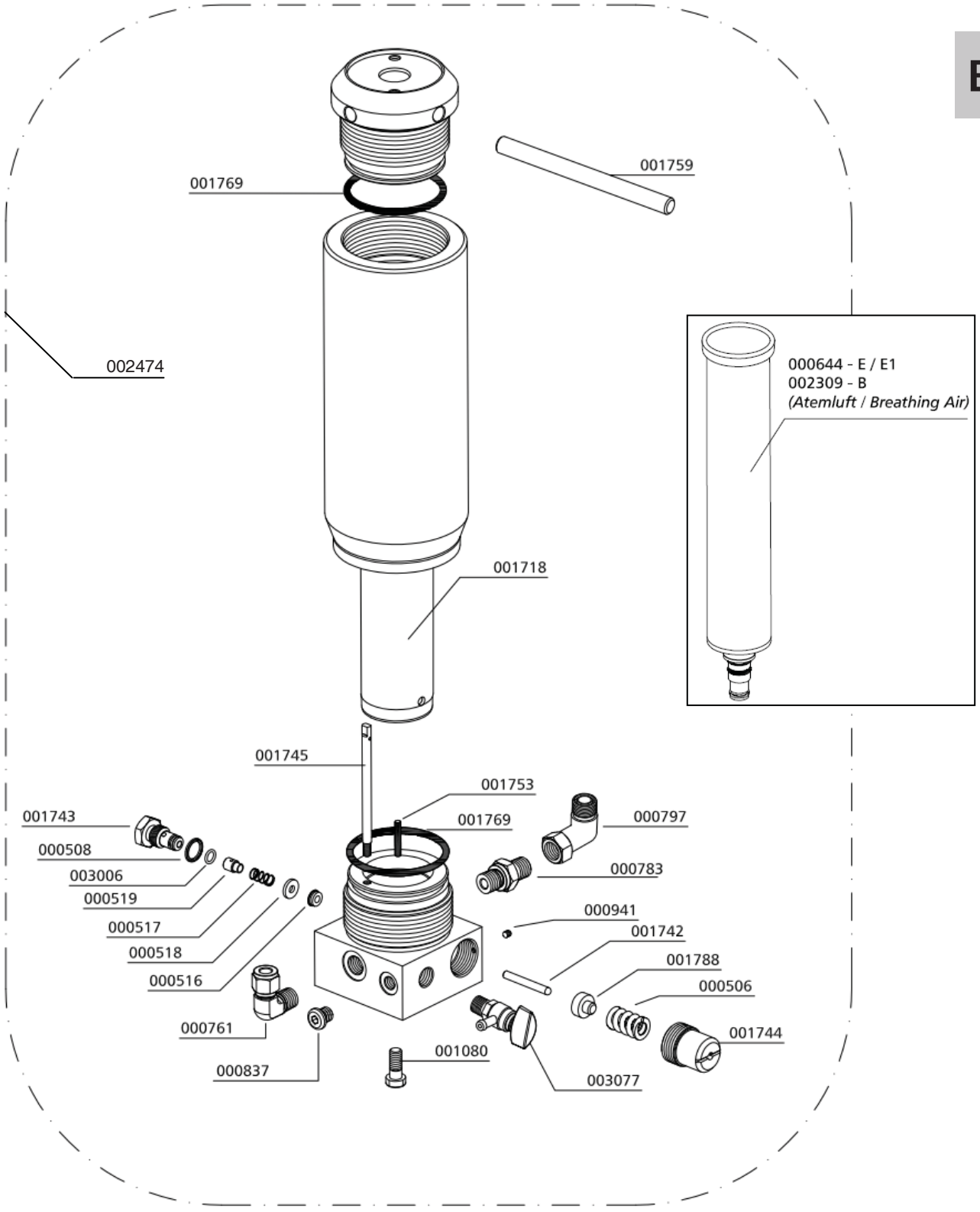

Baugruppe: Enddruck-Sicherheitsventil / Assembly: Final Pressure Safety Valve

Best.-Nr. / Order No.	Benennung	Description
000553	Sicherheitsventil - Bauteilgeprüft	Safety Valve TÜV 225 bar
000554	Sicherheitsventil - Bauteilgeprüft	Safety Valve TÜV 250 bar
000556	Sicherheitsventil - Bauteilgeprüft	Safety Valve TÜV 330 bar
001055	Zylinderschraube	Allen Bolt
001057	Zylinderschraube	Allen Bolt
001244	O-Ring	O-Ring, flange safety valve
001808	Sicherheitsventil 3. Stufe	Safety Valve 3rd Stage
002135	Sicherheitsventil 3. Stufe	Safety Valve 3rd Stage
002136	Sicherheitsventil 3. Stufe	Safety Valve 3rd Stage

Baugruppe: Enddruck-Sicherheitsventil / Assembly: Final Pressure Safety Valve

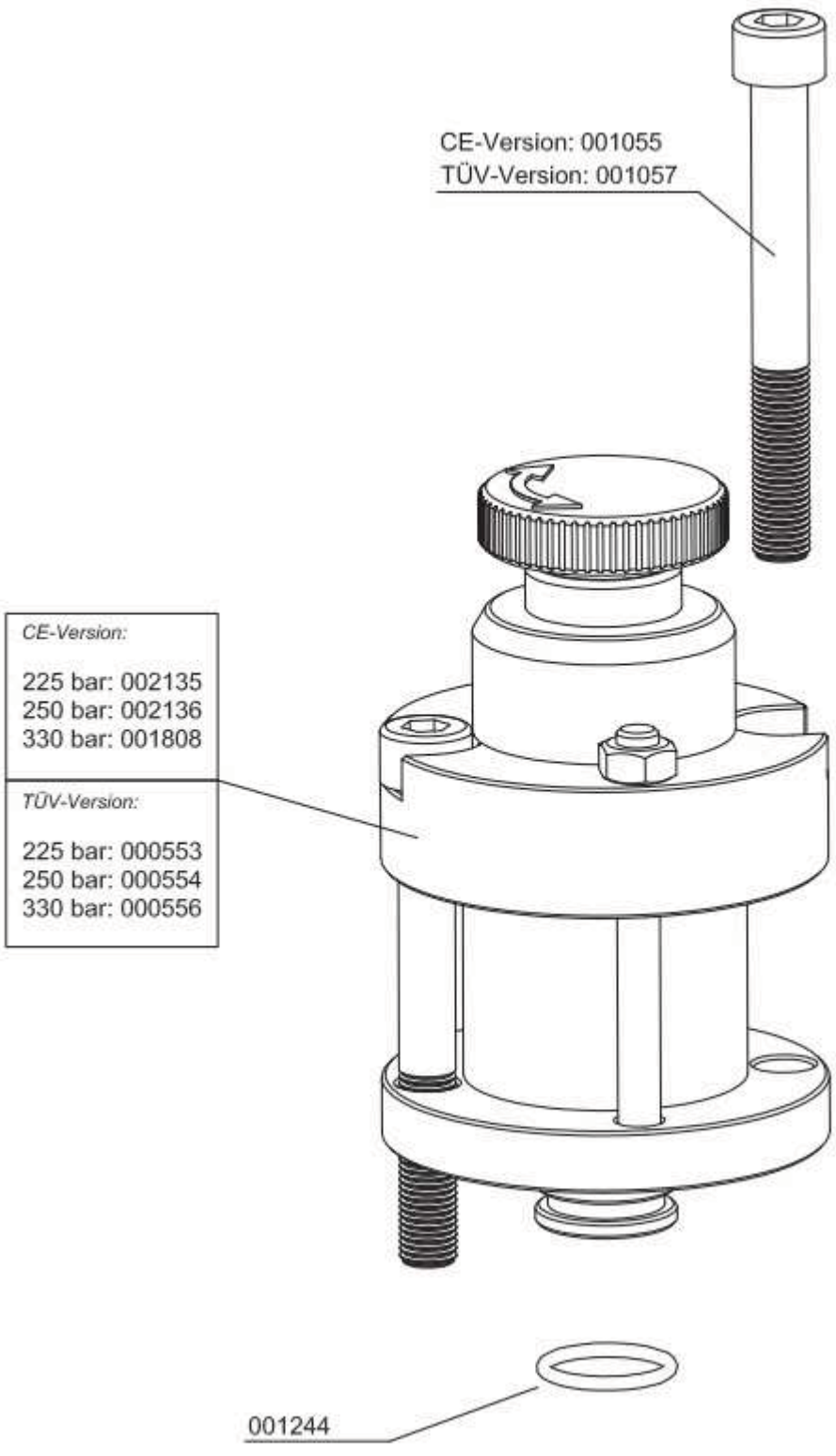

Füllschlauch / Filling Hose

Best.-Nr. / Order No.	Benennung	Description
004084	Hochdruckschlauch 10L / 8S, 800 mm, drehbar	HP-Hose 10L / 8S 800 mm, rotatable

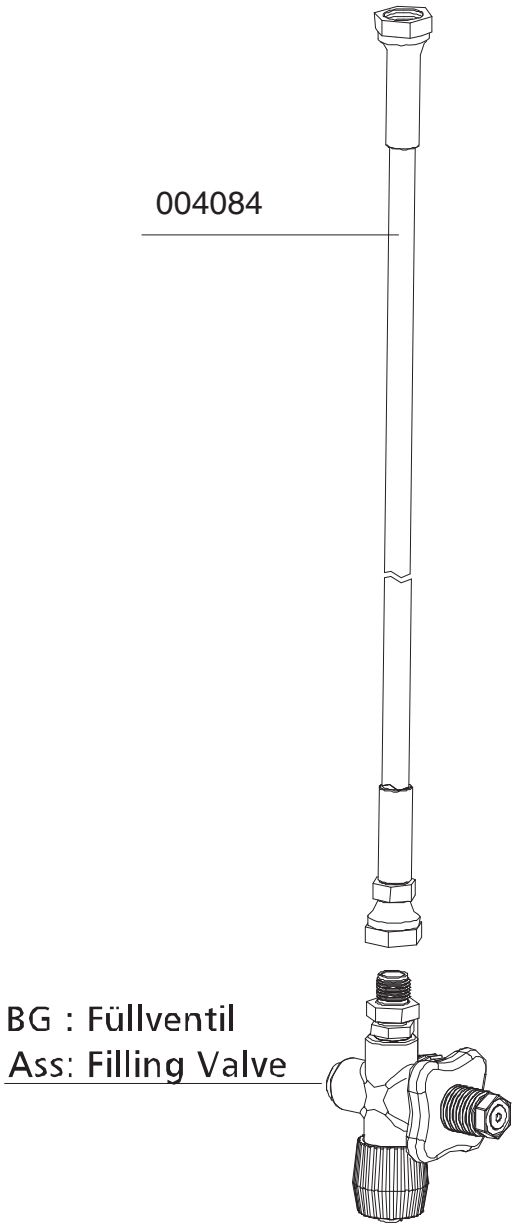

Baugruppe: Kreuzventil / Assembly: Cross Design Valve

Best.-Nr. / Order No.	Benennung	Description
000213	Handrad, schwarz DIN 200bar	Hand Wheel DIN 200 bar, black
000215	Handrad rot DIN 300bar	Hand Wheel DIN 300 bar, red
000386	Gleitscheibe, Kreuzventil	Slide Washer
000387	Feder (Kreuzventil)	Coil Spring, cross d. valve
000665	Manometer, (Messing)	Pressure Gauge, (brass)
000666	Manometerschutzkappe Ø63mm	Protector Pressure Gauge Ø63mm
000696	Füllanschluss o. Handrad 200bar	Filling Connector w/o handwheel 200bar
000698	Füllanschluss o. Handrad 300bar	Filling Connector w/o handwheel 300bar
000709	Füllventil Kreuzbauweise, kompl.	Filling Valve cross design
001237	O-Ring DIN Flaschenanschluss	O-Ring DIN filling connector
001391	O-Ring	O-Ring
001392	Füllhandrad Kreuzventil	Hand Wheel Filling Valve cross
001393	Entlüftungsspindel	Vent Spindle
001394	Entlüftungshandrad	Vent Hand Wheel
001395	Gleitscheibe, schwarz, Kreuzventil	Slide Washer, plastic black
001397	Kupferdichtung	Copper Seal Ring
001398	Madenschraube	Worm Screw
001399	Oberspindel	Adapter Shaft
001400	Dichtspindel, Kreuzventil	Seal Spindle Filling Valve
001401	Schlitzmutter	Slotted Nut
001402	Gehäuseverschraubung komplett mit O-	Filling Spindle Body c/w O-Rings
002812	Verschraubung, Edelstahl	Connection, S/S
003687	Füllventil Kreuzbauweise komplett 200bar	Filling Valve cross complete unit 200bar
003688	Füllventil Kreuzbauweise komplett 300bar	Filling Valve cross complete unit 300bar
004977	Manometer, (Edelstahl)	Pressure Gauge, (s/s)

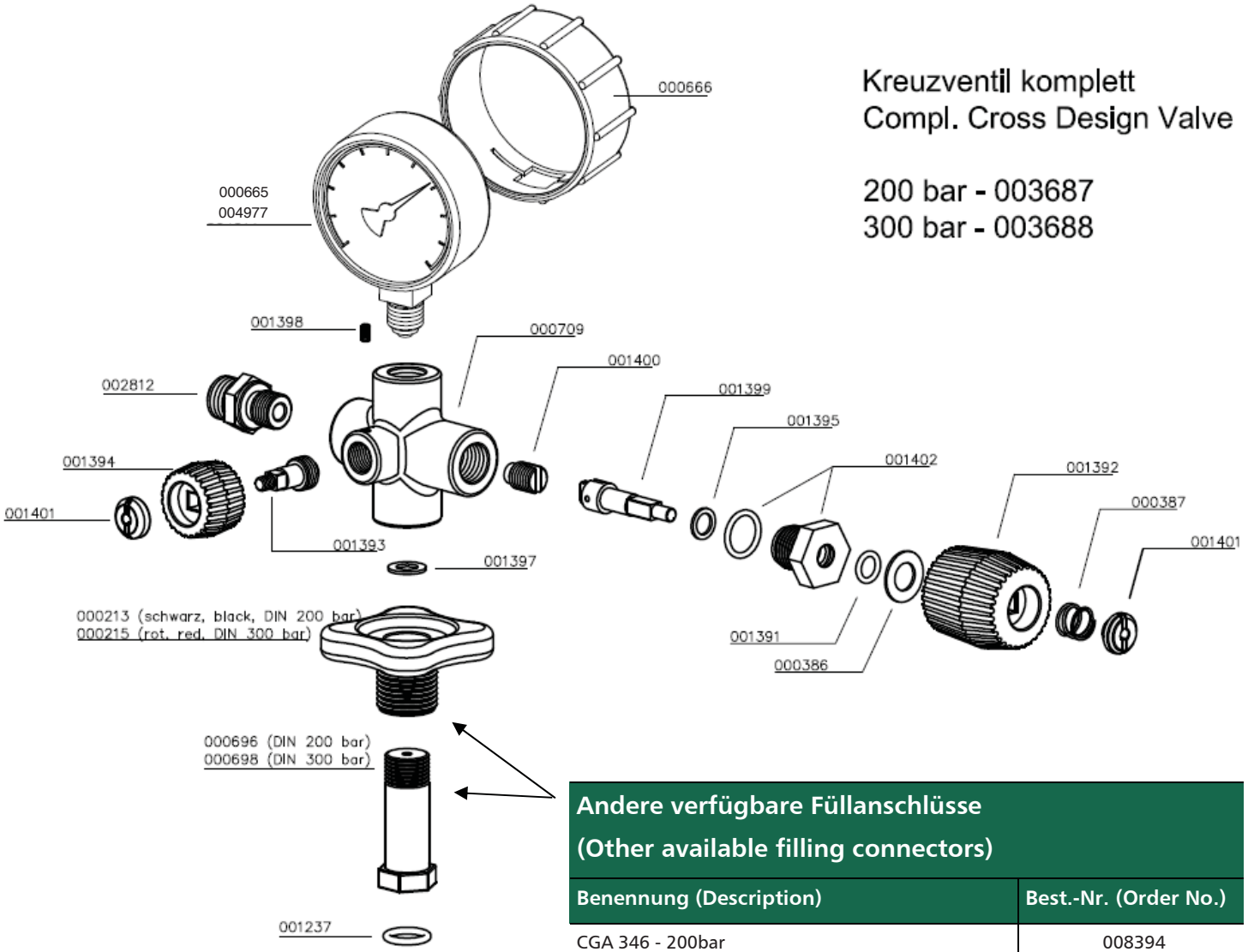

Andere verfügbare Füllanschlüsse (Other available filling connectors)	
Benennung (Description)	**Best.-Nr. (Order No.)**
CGA 346 - 200bar	008394
CGA 347 - 300bar	006842
INT / Yoke - 200/232 bar	002307

Baugruppe: Füllventilhalter / Assembly: Bracket for Filling Valve

Best.-Nr. / Order No.	Benennung	Description
000498	U-Scheibe A6	Washer A6
001156	Stoppmutter	Lock Nut M6
001859	Befestigungsschraube Antriebsabdeckung	Fixing Bolt V-Belt Cover
006254	Füllventilhalter	Filling Valve Holder
006255	Halteblech 2 für Füllventilhalter	Bracket 2 for Filling Valve Ho
006256	Halteblech 1 für Füllventilhalter	Bracket 1 for Filling Valve
006257	Sechskantschraube	Hexagon Bolt

Baugruppe: Füllventilhalter / Assembly: Bracket for Filling Valve

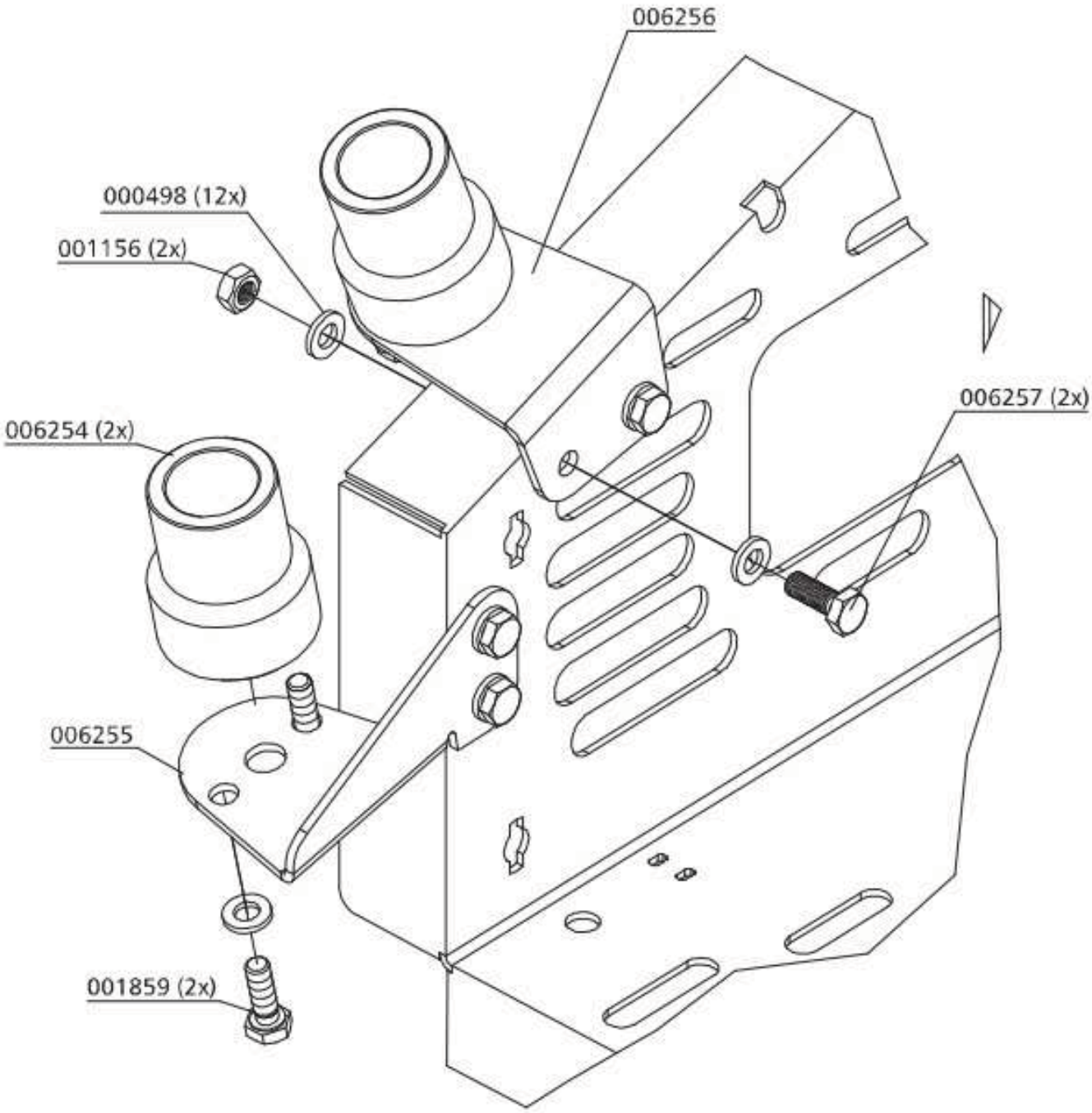

OPTIONS

C

Table of Contents

Additional Filling Hose 2

Switch Over Device 200+300bar 4

Automatic Condensation Drain 8

Auto Shut Down 12

Special Motors 17

Special Voltage 26

ADDITIONAL FILLING HOSE

The additional hose with filling valve allows to fill two bottles simultaneously. The hose with filling valve is available in 200 and 300 bar version.

Please refer to Chapter A for all information about the filling process.

Best.-Nr. / Order No.	Benennung	Description
000126	Y-Verteiler	Y-Connector
000783	Verschraubung	Connection
000799	Verschraubung mit fester Mutter	Connection with fixed nut

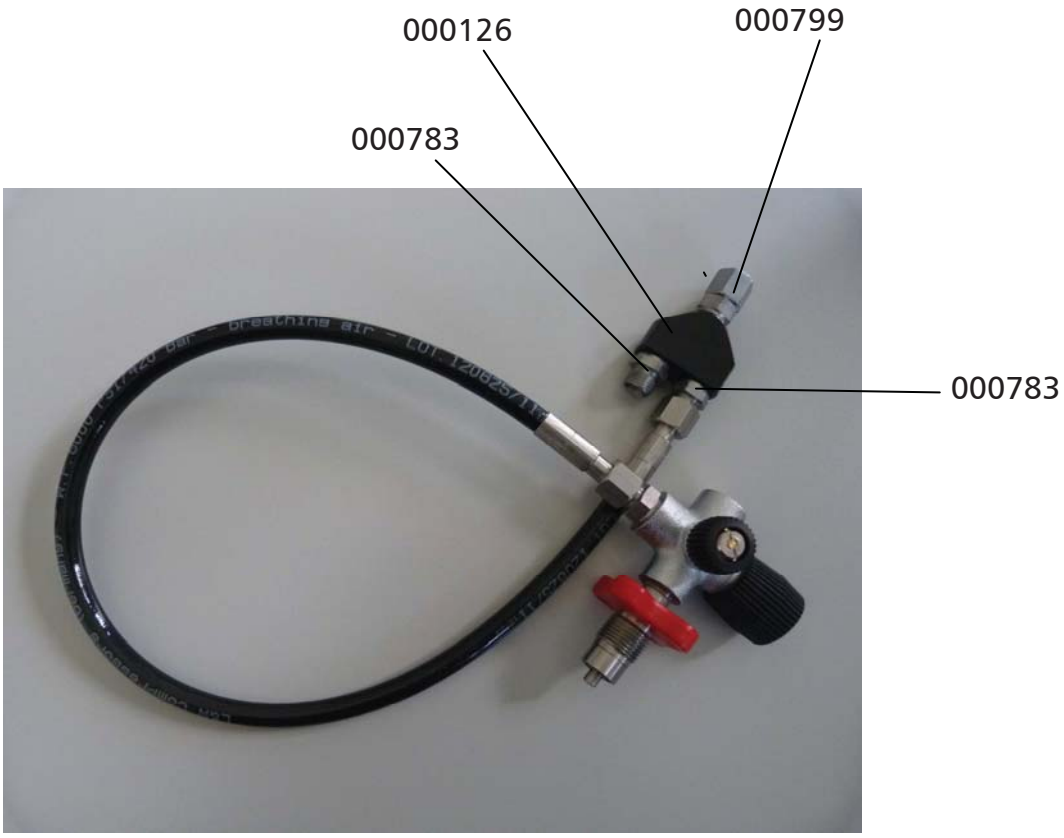

SWITCH OVER DEVICE 200/300 BAR

Operation:

300 bar

The pressure selector spindle (1) should be screwed fully in clockwise.

200 bar

The pressure selector spindle (1) should be screwed fully out anti clockwise.

Switch over Device LW 100

ATTENTION

Operate 200/300bar pressure selector spindle (1) only if filterhousing has been vented by using the drainage valve (2).

Drain Valve at Final Filter Tower

Switch Over Device 200/300bar

Best.-Nr. / Order No.	Benennung	Description
000391	U-Sit Ring,	Seal Ring U-Sit
000796	Verschraubung	Elbow Connection
001001	Zylinderschraube	Allen Bolt
001055	Zylinderschraube	Allen Bolt
001156	Stoppmutter	Lock Nut M6
001244	O-Ring	O-Ring, flange safety valve
001770	O-Ring, Düsenschraube	O-Ring Inlet Jet
001808	Sicherheitsventil 3. Stufe 330bar	Safety Valve 3rd Stage 330bar
002135	Sicherheitsventil 3. Stufe 225bar	Safety Valve 3rd Stage 225bar
002136	Sicherheitsventil 3. Stufe 250bar	Safety Valve 3rd Stage 250bar
002354	O-Ring	O-Ring
005173	Spindel Druckumschaltung	Spindle, switch over device
005174	Dichtkegel Druckumschaltung 200/300 bar	Conical nipple,switch o.device
006304	Umschaltventilkörper	Housing
006305	Hohlschraube	Banjo Bolt
006306	Sterngriff	Star Shaped Grip
006307	Verbindungsnippel	Nozzle

Switch Over Device 200/300bar

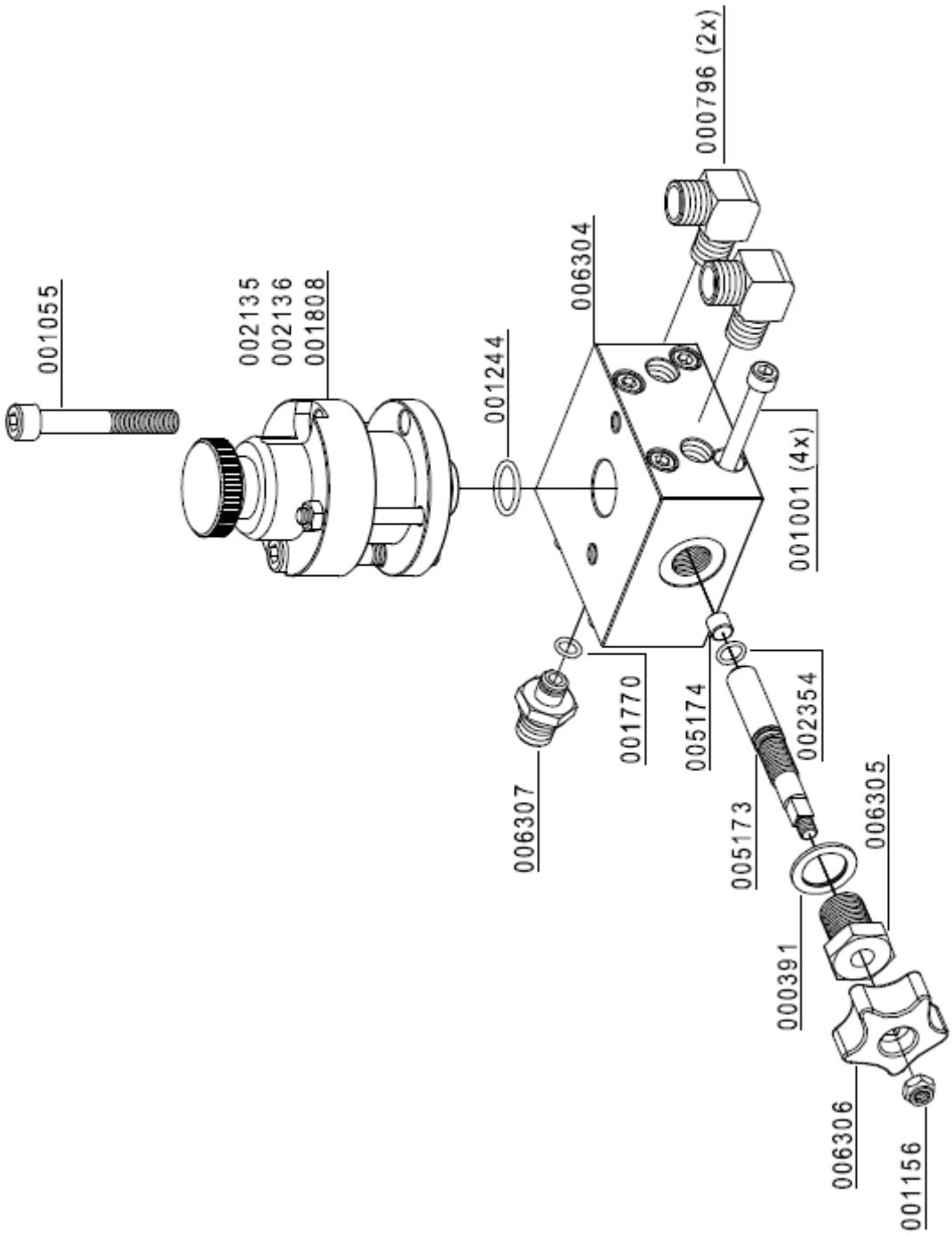

AUTOMATIC CONDENSATION DRAIN

C

Automatic condensation dump system

Note
The collected condensate can contain oil and has to be disposed according to regulations.

The LW 100 compressor can be optional equipped with an automatic condensation dump system.
A solenoid valve drains the 2nd and 3rd condensate separators every 20 minutes.

To test the system, press the blue condensate test drain button on the control box.

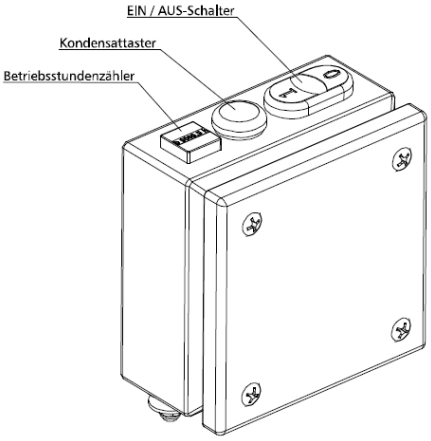

Oil / water separators

Condensate is separated after the 2nd and 3rd stage of compression. An electronic timer controlled the solenoid valve. The timer is located sidways at a small block and activates the dump valves about every 20 minutes.

To release the complete condensate through the black plastic hoses, we recommend using an 20 l container at least.

The drain noise can be kept to a minimum by using a silencer.

Automatic condensate drain LW 100

Maintenance intervals

We recommend to clean oil and water separators every 250 operating hours or at least once a year, to check for corrosion damage and to replace o-rings if necessary.

All oil / water separators have an integrated sinter filter which has to be replaced every 500 operating hours.

Pneum. Kondensat-Ablassventil / Pneumatic Condensate Valve

Best.-Nr. / Order No.	Benennung	Description
000064	Kondensatabscheider G1/4"	Condensate Separator G1/4"
000067	Schalldämpfer G1/4"	Silencer G1/4"
000602	Sandwichtimer	Sabdwichtimer 24-230V DC/AC
000607	Magnetspule NC 230V AC 40 bar	Solenoid Coil NC 230V AC 40bar
000617	Stecker, Magnetventil DIN Form A	Plug for Solenoid Shape A
000710	Verschraubung	Connection w/o nut& olive seal
000712	Verschraubung	Connection w/o nut& olive seal
000722	Verschraubung	Connection
000732	Mutter	Union Nut 06L
000733	Schneidring	Olive Seal SR 06 (Ø 6mm)
000734	Mutter	Nut 06S
000985	Zylinderschraube	Allen Bolt
000999	Zylinderschraube	Allen Bolt
001175	U-Scheibe A4	Washer A4
001234	O-Ring	O-Ring
001236	O-Ring	O-Ring
001238	O-Ring Füllstutzen zu Kipphebelventil	O-Ring
001247	O-Ring	O-Ring
001735	Sinterfilter (Öl-/Wasserabscheider)	Sinter Filter (Oil Water Separator)
002361	Schnellkupplung gerade	Quick rel. couping, straight
002409	Winkelschnellkupplung	Quick release coupling elbow
006294	Kondensatventil Gehäuse	Autom. Condens. Drain Housing
006295	Kondensatventil Deckel	Autom. Condens. Drain Cover
006296	Kondensatautomatik Steuerkolben	Autom. Condens. Drain Piston
006297	Kondensatautomatik Düse	Autom. Condens. Drain Jet
006298	Kondensatautomatik Filter	Autom. Condens. Drain Filter
008157	Magnetventil	Solenoid Valve
008158	Halteblech Kondensatabscheider	Bracket Condensate Separator

Pneum. Kondensat-Ablassventil / Pneumatic Condensate Valve

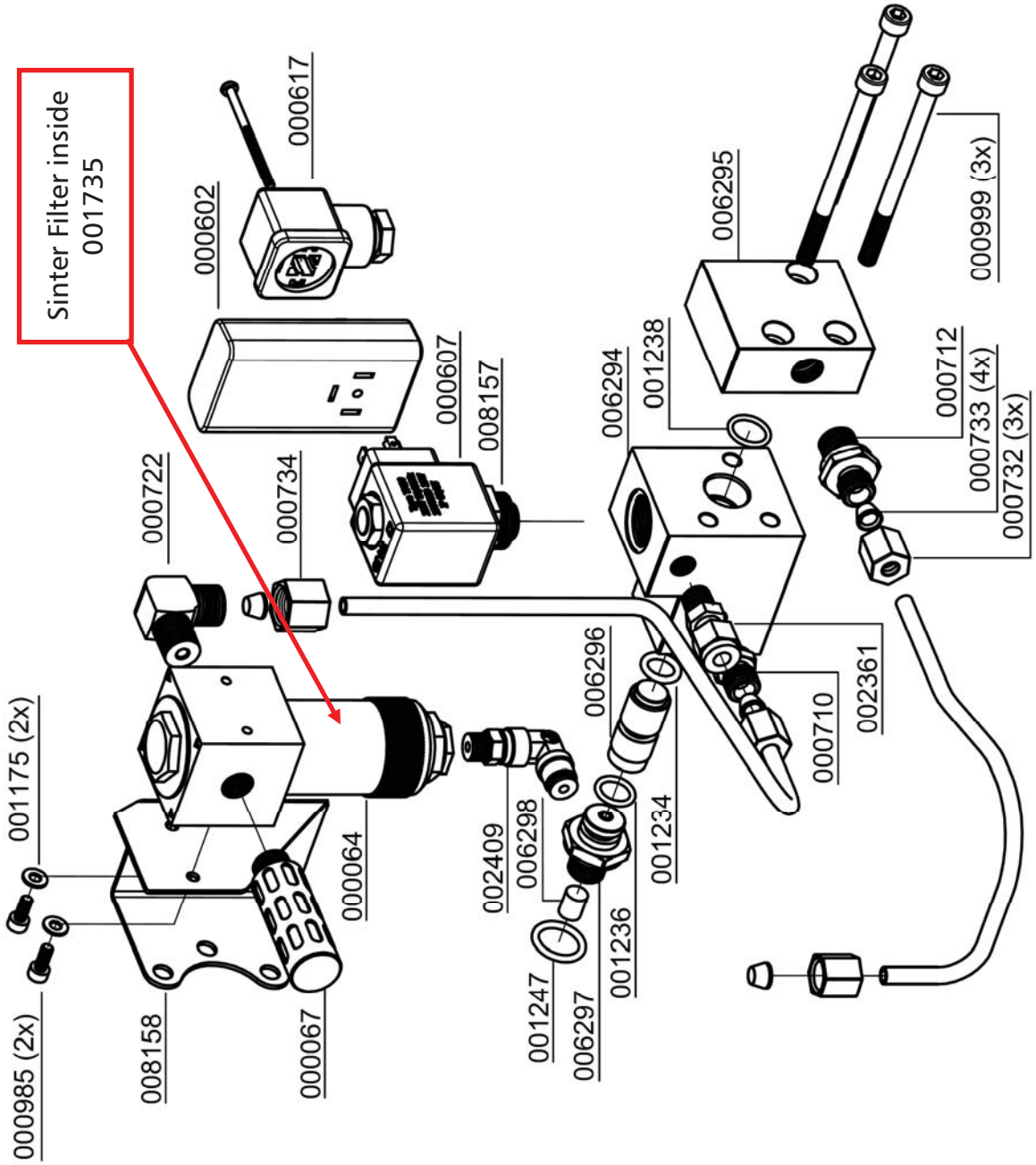

AUTO SHUT DOWN

Operation:

The compressor has a control box with an integrated hour counter.

Before starting the compressor, press the blue condensate button for 5 seconds. This needs to be done to vent the residual pressure and the condensate.

After this you can start the compressor by pushing the power button [I].

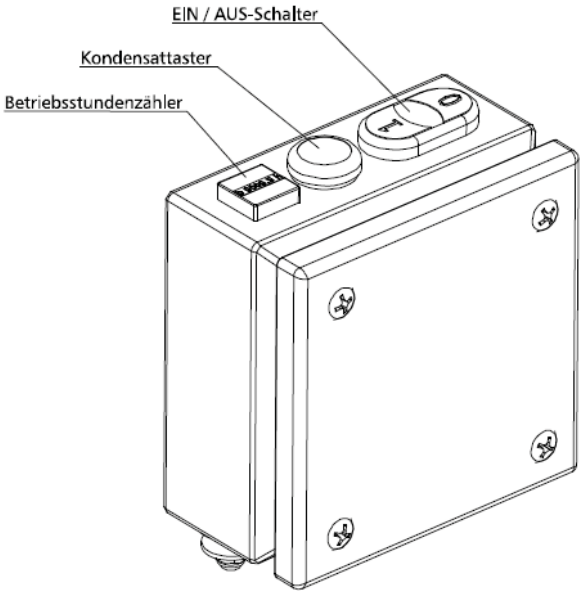

Final pressure switch

The pressure switch shuts off the compressor automatically when the selected final pressure is reached. The final pressure switch is already adjusted to the corresponding cut-out pressure.

The pressure can be adjusted with the upper adjusting screw as follows:

Increasing cut-out pressure:

Turn the adjusting screw clockwise

Reducing cut-out pressure:

Turn the adjusting screw anti-clockwise

Enddruckschalter

Adjust the pressure switch in steps of a quarter turn.
Restart the compressor after every adjustment step to verify the actual cut-out pressure.

Note
Do not adjust the final pressure switch to the safety valve pressure. The final pressure switch has to be adjusted to min. 10 bar below the safety valve pressure. Otherwise, the safety valve can open during operation. This considerably reduces the life of the safety valve.

Safety valve	Max. Operating Pressure
225 bar	215 bar
250 bar	240 bar
330 bar	320 bar

Druckschalter / Pressure Switch

Best.-Nr. / Order No.	Benennung	Description
000203	Druckschalter 50-350 bar	Pressure Switch 50-350 bar
000712	Verschraubung	Connection
000722	Winkelverschraubung	Elbow Connection

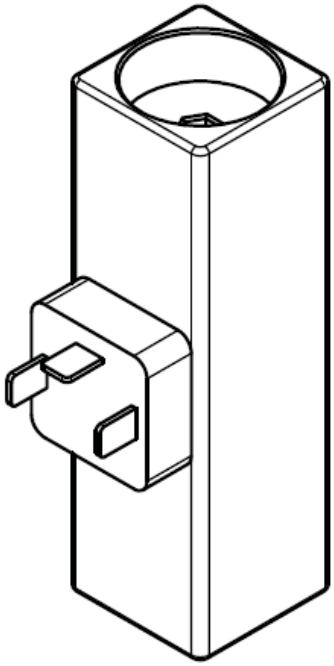

000203

Nur Abschaltautomatik
Only Auto-Stop

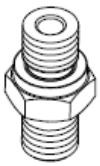

000712

Kondensatablassautomatik und Abschaltautomatik
Auto Drain and Auto-Stop

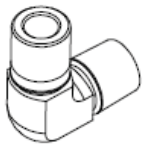

000722

Endfiltergehäuse / Final Filter Housing

Best.-Nr. / Order No.	Benennung	Description
000710	Verschraubung	Connection
000721	Winkelverschraubung	Elbow Connection

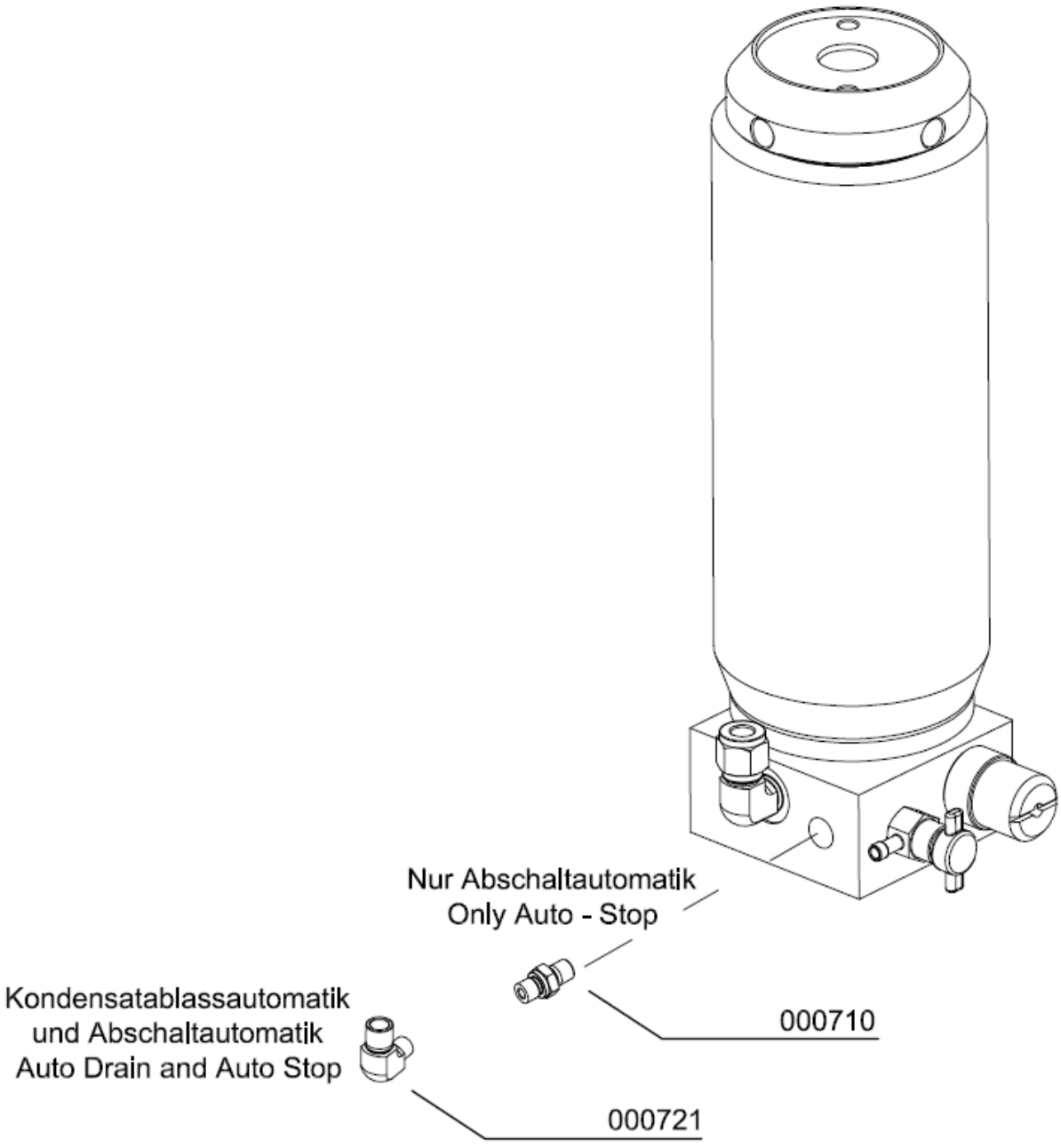

Schaltkasten / Control Box

Best.-Nr. / Order No.	Benennung	Description
001159	Stoppmutter	Lock Nut M8
001182	U-Scheibe A8	Washer A8
001828	U-Scheibe	Washer
001841	Ein / Aus Schalter	On / Off Switch
002502	Taster blau (Kondensattest), kompl.	Switch blue for condens. test
004660	Betriebsstundenzähler 230 V	Hour counter 230V
006093	Schlossschraube	Carriage Bolt
006311	Schaltkasten	Control Box

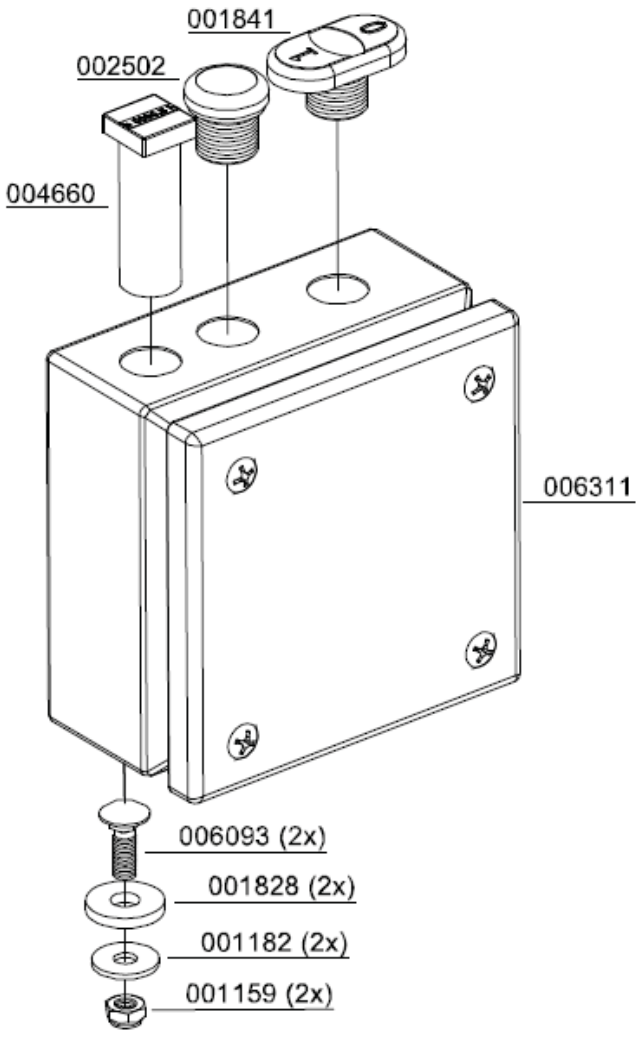

SPECIAL MOTORS

Special Motors

The compressor can be equipped with different motors. The power of the compressor motor and the cooling air requirement can be different from the standard configuration.

In the following pages you will find the data sheets of different LW 100 models.

Note
If your required data sheet is missing, please contact us directly under service@lw-compressors.com.

Available motor for LW 100 - Models

Model	Motor Manufacturer	Characteristics
LW 100 B (ECO)	Honda	4,1 kW
LW 100 E (ECO)	AC - Motor	Motor in IP 56
LW 100 E1 (ECO)	AC - Motor	230V / 60Hz / 1~
LW 100 E1 (ECO)	AC - Motor	110V / 60Hz / 1~
LW 100 E1 (ECO)	Baldor	110V / 60Hz / 1~

LW 100 B ECO / LW 100 B with Honda engine

LW 100 B ECO

LW 100 B

Technical Data

Technical Data	LW 100 B / (ECO)
Capacity [l/min]:	100
Max. Operating Pressure [bar]:	350
RPM [min^{-1}]:	2300
Number of Pressure Stages:	3
Cylinder Bore 1st Stage [mm]:	Ø 60
Cylinder Bore 2nd Stage [mm]:	Ø 30
Cylinder Bore 3rd Stage [mm]:	Ø 12
Medium:	Compressed Air / Breathing Air
Intake Pressure:	atmospheric
Oil Capacity [l]:	0,5
Intake Temperature [°C]:	0 < +45
Ambient Temperature [°C]:	+5 < +45
Cooling Air Volume [m^3/h]:	> 1230
Voltage:	-
Protection Class Drive Motor:	-
Drive Power [kW]:	4,1
RPM Motor [min^{-1}]:	2890
Start:	Hand start
Noise level [dB(A)]:	93
Dimensions L x W x H [mm]:	780 x 380 x 400
Weight [kg]:	approx. 46 / (42)
Content Volume Filter housing [l]:	0.37

Prior to first commissioning, observe the following:

- Ensure that cooling air can flow freely.
- Position compressor in direction of wind so that exhaust fumes are blown away from the unit.
- Take protection measures to avoid damages or injury by exhaust gases/exhaust pipe.
- Check fuel capacity.
- Check drive motor oil level.
- Check the oil level of the compressor.
- Check all connections and tighten if necessary.
- Check if a filter cartridge is in place. (see "Service and Maintenance")
- Check V-belt tension. (see "Service and Maintenance")
- Read carefully the handbook of the petrol engine.
- Ensure that all filling valves are closed. Open one filling valve and hold tight manually!

Start the compressor

1. Open fuel valve (Fig. 1)
2. Switch motor switch in position 1
3. Pull start (Fig. 2)
4. Close condensate valves
5. Run the compressor for about 2 minutes
6. Close the open filling valve carefully
7. Run the compressor up to maximum pressure and check the function of the final pressure safety valve. If the compressor is equipped with an automatic stop system please check the automatic shut down at final pressure. If the final pressure switch does not shut off, switch off the compressor with the OFF button (see chapter "Remedying faults").
8. Check the compressor unit for leaks (see "Service and Maintenance")
9. Option: Automatic Condensate Drain
   Now check the condensate drain valves:
   - Fix the black condensate hoses
   - Drain test - press the test button
   - If correct, air escapes
10. Stop the compressor by pushing the OFF button.
11. Open all filling valves carefully to vent.

Fig. 1 - Fuel valve

Fig. 2 - Speed control and pull start

LW 100 E mit AC- Motor in protection class IP 56

LW 100 E (Frontansicht)

Motor IP56

Best.-Nr. / Order No.	Benennung	Description
008918	Motor—3 Phasen 380-460V, IP56	Motor—3 Phase 380-460V, IP56

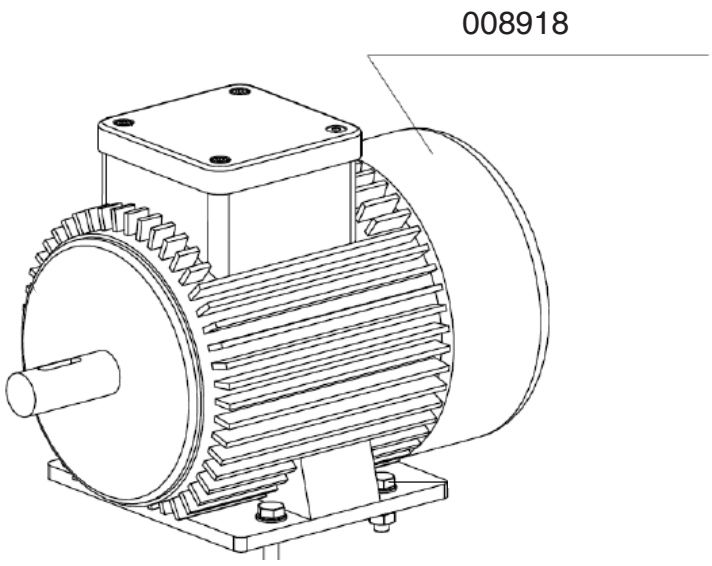

Technical Data

Technical Data	LW 100 E1 / (ECO)
Capacity [l/min]:	100
Max. Operating Pressure [bar]:	350
RPM [min^{-1}]:	2300
Number of Pressure Stages:	3
Cylinder Bore 1st Stage [mm]:	Ø 60
Cylinder Bore 2nd Stage [mm]:	Ø 30
Cylinder Bore 3rd Stage [mm]:	Ø 12
Medium:	Compressed Air / Breathing Air
Intake Pressure:	atmospheric
Oil Capacity [l]:	0,5
Intake Temperature [°C]:	0 < +45
Ambient Temperature [°C]:	+5 < +45
Cooling Air Volume [m^3/h]:	> 660
Voltage:	380-460V / 3-Phase / 50/60Hz
Protection Class Drive Motor:	IP 56
Drive Power [kW]:	2.2
RPM Motor [min^{-1}]:	2890
Start:	Start / Stop switch
Noise level [dB(A)]:	82
Dimensions L x W x H [mm]:	650 x 390 x 400
Weight [kg]:	approx. 43 / (39)
Content Volume Filter housing [l]:	0.37

LW 100 E1 with AC- Motor

Specification: 230V / 60Hz / 1~

LW 100 E1 (Front view)

LW 100 E1 (Back view)

Technical Data

Technical Data	LW 100 E1 / (ECO)
Capacity [l/min]:	100
Max. Operating Pressure [bar]:	350
RPM [min^{-1}]:	2300
Number of Pressure Stages:	3
Cylinder Bore 1st Stage [mm]:	Ø 60
Cylinder Bore 2nd Stage [mm]:	Ø 30
Cylinder Bore 3rd Stage [mm]:	Ø 12
Medium:	Compressed Air / Breathing Air
Intake Pressure:	atmospheric
Oil Capacity [l]:	0,5
Intake Temperature [°C]:	0 < +45
Ambient Temperature [°C]:	+5 < +45
Cooling Air Volume [m^3/h]:	> 660
Voltage:	230V / 1-Phase / 50Hz
Protection Class Drive Motor:	IP 55
Drive Power [kW]:	2.2
RPM Motor [min^{-1}]:	2890
Start:	Start / Stop switch
Noise level [dB(A)]:	82
Dimensions L x W x H [mm]:	650 x 390 x 400
Weight [kg]:	approx. 43 / (39)
Content Volume Filter housing [l]:	0.37

SPECIAL VOLTAGE

Special Voltage

The compressor unit can be equipped with different voltages and frequencies. The power of the compressor motor can be lower and higher based on the needed requirement.

The following table will show possible voltages and frequencies. The associated data sheets can be found in the following pages.

Note
If your required data sheet is missing, please contact us directly under service@lw-compressors.com.

Possible special voltages and frequencies

Voltage	Frequency
440 V	50 Hz
440 V	60 Hz
230 V	50 Hz
230 V	60 Hz

Technical Data

Technical Data	LW 100 E / (ECO)
Capacity [l/min]:	100
Max. Operating Pressure [bar]:	350
RPM [min^{-1}]:	2300
Number of Pressure Stages:	3
Cylinder Bore 1st Stage [mm]:	Ø 60
Cylinder Bore 2nd Stage [mm]:	Ø 30
Cylinder Bore 3rd Stage [mm]:	Ø 12
Medium:	Compressed Air / Breathing Air
Intake Pressure:	atmospheric
Oil Capacity [l]:	0,5
Intake Temperature [°C]:	0 < +45
Ambient Temperature [°C]:	+5 < +45
Cooling Air Volume [m^3/h]:	> 660
Voltage:	230V / 3-Phase / 50 Hz
Protection Class Drive Motor:	IP 55
Drive Power [kW]:	2.2
RPM Motor [min^{-1}]:	2890
Start:	Start / Stop switch
Noise level [dB(A)]:	82
Dimensions L x W x H [mm]:	650 x 390 x 400
Weight [kg]:	approx. 43 / (39)
Content Volume Filter housing [l]:	0.37

Technical Data

Technical Data	LW 100 E / (ECO)
Capacity [l/min]:	100
Max. Operating Pressure [bar]:	350
RPM [min^{-1}]:	2300
Number of Pressure Stages:	3
Cylinder Bore 1st Stage [mm]:	Ø 60
Cylinder Bore 2nd Stage [mm]:	Ø 30
Cylinder Bore 3rd Stage [mm]:	Ø 12
Medium:	Compressed Air / Breathing Air
Intake Pressure:	atmospheric
Oil Capacity [l]:	0,5
Intake Temperature [°C]:	0 < +45
Ambient Temperature [°C]:	+5 < +45
Cooling Air Volume [m^3/h]:	> 792
Voltage:	230V / 3-Phase / 60 Hz
Protection Class Drive Motor:	IP 55
Drive Power [kW]:	2.64
RPM Motor [min^{-1}]:	2890
Start:	Start / Stop switch
Noise level [dB(A)]:	82
Dimensions L x W x H [mm]:	650 x 390 x 400
Weight [kg]:	approx. 43 / (39)
Content Volume Filter housing [l]:	0.37

Technical Data

Technical Data	LW 100 E / (ECO)
Capacity [l/min]:	100
Max. Operating Pressure [bar]:	350
RPM [min^{-1}]:	2300
Number of Pressure Stages:	3
Cylinder Bore 1st Stage [mm]:	Ø 60
Cylinder Bore 2nd Stage [mm]:	Ø 30
Cylinder Bore 3rd Stage [mm]:	Ø 12
Medium:	Compressed Air / Breathing Air
Intake Pressure:	atmospheric
Oil Capacity [l]:	0,5
Intake Temperature [°C]:	0 < +45
Ambient Temperature [°C]:	+5 < +45
Cooling Air Volume [m^3/h]:	> 660
Voltage:	440V / 3-Phase / 50 Hz
Protection Class Drive Motor:	IP 55
Drive Power [kW]:	2.2
RPM Motor [min^{-1}]:	2890
Start:	Start / Stop switch
Noise level [dB(A)]:	82
Dimensions L x W x H [mm]:	650 x 390 x 400
Weight [kg]:	approx. 43 / (39)
Content Volume Filter housing [l]:	0.37

ATTACHMENT

D

Lenhardt & Wagner GmbH

An der Tuchbleiche 39
D-68623 Lampertheim – Hüttenfeld

www.lw-compressors.com

Operating Instruction

Safety valve

Typ:

SiV2 BKZ 989 TÜV.SV.12-989.5.G.V.P CE 0091 AlMgSi1 F31 1100* Lenhardt & Wagner

SiV BKZ TÜV.SV.14-1140.5.G.V.p CE 0091 AlMgSi1 F31 1100* Lenhardt & Wagner

Set pressure:	**see mark (hand wheel on top of valve)**
Maximum outflow:	**Set pressure 100-159 bar: 750 l / min** **Set pressure 160-350 bar: 1.100 l / min**
Suitable media:	**Media-resistant, non-corrosive gases**

The safety valve is used for protection of pressurized components, eg pipelines, pressure vessels, or the compressor itself.

The hand wheel on the top of the safety valve is marked with the adjusted set pressure.

Safety valve with socket

1) ***Identification of set pressure***
2) ***Seal***
3) ***Fixing screws***[1]
4) ***Venting srew (hand wheel)***
5) ***Identification serial number***
6) ***Socket for safety valve***

[1] und die Anforderungen des AD 2000 Merkblatts W7 erfüllen. Schaftlänge 70mm. The fixing screws M8 must be strength class 8.8 and meet the requirements of Merkblatt AD 2000 leaflet W7. Shaft length 70mm.

In order to prevent manipulation of the set pressure, all safety valves are factory fitted with a seal.

A safety valve on which the seal has been removed, must be returned before further use to the manufacturer for repair / adjustment.

In addition, the safety valve has a venting device (hand wheel).
In the rotation direction clockwise, the safety valve and herewith also the filter housing of the final stage could be completely vented.

During normal operation, the screw is unscrewed to the upper stop anticlockwise, an integrated safety ring prevents that the screw can be completely unscrewed.

If a safety valve blow off, the system must be switched off immediately and investigate the cause of the error.

There are two possible reasons:
1. The safety valve is defective and blows off before the set pressure.
In this case the safety valve should be submitted immediately to the manufacturer for repair or replaced with a new one.

2. The safety valve opens properly, the problem is on the system.
A constant blowing of the safety valve is not permitted, the sealing seat of the valve can be damaged.
The error on the system must be detected and repaired before further filling operations.

The safety valve may only be used if it is ensured that the maximum flowrate of the system does not exceed the blowoff rate of the safety valve.

The safety valve may only be used with the approved media.
Repair work on compressors must only be performed by trained personnel.

Dismantling of the safety valve

Ensure that on the safety valve is no pressure.

Loosen and remove the two M8 fixing bolts with a 6mm Allen key.

The safety valve can now be removed by turning and simultaneously pulling out of the socket.

Mounting
1. Clean the safety valve socket.
2. Oil the insert pin of the safety valve including the O-ring with 1 to 2 drops of oil.
3. Press the safety valve pin complete into the socket.
4. Fasten the safety valve with the two 8 mm allen screws into the socket
   (Tightening torque: 10 Nm)
5. Screw the venting screw (hand wheel) anticlockwise to its upper limit.
6. Start the System (Compressor), check installation for leaks and proper function.

Manufacturer: **Lenhardt & Wagner GmbH**
An der Tuchbleiche 39
D-68623 Lampertheim – Hüttenfeld

Contakt: **E-Mail: service@lw-compressors.com**
Web: www.lw-compressors.com
Tel.: +49 (0) 6256 – 85880 0
Fax: +49 (0) 6256 – 85880 14

Note:
Use the safety valve only in a technically perfect condition, for its intended purpose, safety and danger awareness, in compliance with the operating instructions!
Especially disorders which could affect safety must be remedied immediately!

Notes:
- The safety valve must be installed directly on the protected pressure vessel and / or the plant.
- The safety valve must be installed in an upright position.
- The flow area of the port must be greater than the valve opening.
- Protect valve against splashes

Maintenance:

- The safety valve is periodically - in accordance with the currently valid Pressure Equipment Directives - to check on operation and reliability.

- Refill annually lubricating oil:
  Oil filling position:
  Hole on the spacer (see arrow, Figure 1)

- Oil level: Fill oil into the hole until oil comes out of the hole.

Figure 1: Position for oil refill

To be used lubricating oil for the safety valve: L&W Article Nr.: 008500 (content: 30 ml)

- O r i g i n a l -

E G - K O N F O R M I T Ä T S E R K L Ä R U N G

CE

Lenhardt & Wagner GmbH
An der Tuchbleiche 39
D-68623 Lampertheim - Hüttenfeld
Germany

Tel.: 0 62 56 – 85 880 0
Fax: 0 62 56 – 85 880 14
www.lw-compressors.com

EG-KONFORMITÄTSERKLÄRUNG IM SINNE DER EG-MASCHINENRICHTLINIE 2006/42/EG ANHANG II A UND IM SINNE DER EG-DRUCKGERÄTERICHTLINIE 97/23/EG ANHANG VII

EC-CONFORMITY DECLARATION IN ACCORDANCE WITH EC-MACHINERY DIRECTIVE 2006/42/EC APPENDIX II A EC PRESSURE EQUIPMENT DIRECTIVE 97/23/EC APPENDIX VII

Hiermit erklären wir,		Herewith we
Lenhardt & Wagner GmbH **An der Tuchbleiche 39** **D-68623 Lampertheim-Hüttenfeld** **Germany**		
dass die nachfolgend bezeichnete Baueinheit aufgrund ihrer Konzipierung und Bauart sowie in der von uns in Verkehr gebrachten Ausführung, den einschlägigen grundlegenden Sicherheits- und Gesundheitsanforderungen der EG-Richtlinien entspricht. Die Baueinheit fällt in die Kategorie 3.3 der DGRL 97/23/EG, wurde jedoch nach den Standards der DGRL 97/23/EG aufgebaut und geprüft. Bei einer nicht mit uns abgestimmten Änderung der Baueinheit verliert diese Erklärung ihre Gültigkeit.		confirm that the below mentioned unit complies with the basic safety and health requirements of the EC directives concerning design, construction and putting the model into circulation. The unit falls into the category 3.3 of the PED 97/23/EC, but has been built and tested according to the standards of the PED 97/23/EC. This declaration is no longer valid if the unit has been modified without our agreement.
Bezeichnung der Baueinheit: **Description of Unit:**		**Atemluftkompressor** **Breathing Air Compressor**
Typ der Baueinheit: **Type of Unit:**		☐ **ECO-Modell** ☐ **Standard-Modell** **L&W** ☐ **MSA** ☐ **100 E** ☐ **100 E1** ☐ **100 B**
Seriennummer der Baueinheit: **Serial Number of Unit:**		**(Block-Nr: / Serie/ Monat/ Jahr)**
max. Betriebsdruck: **max. working pressure:** **Sicherheitsventil:** **Safety Valve:**		**bar** **Serien-Nr.:** **Serial-No.:**

- O r i g i n a l -

E G - K O N F O R M I T Ä T S E R K L Ä R U N G

CE

		Typ: SIV 1 **Type:** **Bauteilkennzeichen-Nr:** **Type-test approval mark:** **TÜV.SV.12-989.5.G.V.P** **Modul B according to PED 97/23/EG** Category: IV Certificate-No.: Z-IS-DDB-MAN-06-03-13637794-001 Test report No.: P-IS-DDB-MAN-05-10-13637794-001 **Modul F according to PED 97/23/EG**
Einschlägige EG-Richtlinien		**Relevant EC-Directives**
• 2006/42/EG - Maschinenrichtlinie • 97/23/EG - Druckgeräterichtlinie • 2003/10/EG - Gefährdung durch physikalische Einwirkungen (Lärm) • 2000/14/EG - RL Umweltlärm von Maschinen		• 2006/42/EC - Machinery Directive • 97/23/EC - Pressure Equipment Directive • 2003/10/EC - Risks arising from physical agents (noise) • 2000/14/EC - Directive relating to the noise emission in the environment by equipment for use outdoors
Angewandte harmonisierte Normen – insbesondere: **EN ISO 12100:2010, DIN EN 12021:2014, DIN EN 1012-1:2010, DIN EN ISO 13850:2008, DIN EN ISO 13857:2008, DIN EN 60204-1:2006**		**Applicable and adapted Norms - particulary:** **EN ISO 12100:2010, DIN EN 12021:2014, DIN EN 1012-1:2010, DIN EN ISO 13850:2008, DIN EN ISO 13857:2008, DIN EN 60204-1:2006**
Angewandte nationale Normen und technische Spezifikationen - insbesondere: **1) AD 2000 Merkblätter** **2) Technische Regeln Druckgase (TRG): TRG 400, 401, 402 (ohne Betriebsstätte) und TRG 790)**		**Applicable national Norms and technical Specification – particulary:** **1) AD 2000 Bulletins** **2) Technical Rules for compressed Gas (TRG 400, 401, 402 (without manufacturing facility) and TRG 790)**

Lampertheim - Hüttenfeld, den:

Lenhardt & Wagner GmbH Bernd Wagner **Geschäftsführer / Managing Director**	L&W COMPRESSORS	